SECTION 10
RIGGING, TRACK AND BALANCE

10.000 RIGGING TRACK AND BALANCE

10.001 Introduction

10.002 Rod End Adjustment Procedure

10.100 RIGGING

10.110 Main Rotor Flight Controls

10.111 Cyclic Controls

10.112 Swashplate

10.113 Collective Control

10.120 Main Rotor

10.121 Cyclic Travel Rigging

10.122 Collective Travel Rigging

10.130 Tail Rotor Flight Controls

10.131 Pedals

10.132 A316 Bellcrank

10.133 A331 Bellcrank

10.134 A120-1 Bellcrank

10.135 Tail Rotor Pitch Links

10.140 Tail Rotor Rigging

10.150 Throttle Correlation Rigging

10.160 Actuator Rigging

10.200 TRACK AND BALANCE

10.210 Equipment Requirements

10.220 Equipment Installation

10.221 Main Rotor Equipment Installation

10.200 TRACK AND BALANCE (cont'd)

10.222 Tail Rotor Equipment Installation

10.230 Main Rotor Track and Balance Procedure

10.231 Main Rotor Balance Adjustments

10.232 Main Rotor Pitch Link Adjustment

10.233 Main Rotor Trim Tab Adjustment

10.234 Main Rotor Track and Balance Trouble Shooting

10.240 Tail Rotor Balance Procedure

10.250 Autorotational RPM Adjustment

SECTION 10
RIGGING,TRACK AND BALANCE

10.000 RIGGING, TRACK AND BALANCE

10.001 Introduction

This section contains the procedures necessary to rig the main rotor flight controls, tail rotor flight controls and throttle correlation. The track and balance procedures in this section are to be used in conjunction with Chadwick-Helmuth balancing equipment instructions.

10.002 Rod End Adjustment Procedures For Rigging

The following procedure is a standard for the adjustment of rod ends on the R22 helicopter.

1. Loosen the palnut and jamnut on the rod end.

2. Screw the rod end in or out of the push-pull tube or pitch link as required to obtain the proper rigging adjustment.

3. After adjustment of the rod end, check the witness hole in the push-pull tube or pitch link to ensure the rod end is installed far enough to cover the hole. This should be checked using a piece of .020" safety wire. The safety wire must not pass through the witness hole into the push-pull tube or pitch link.

4. Align the rod ends on both ends of the push-pull tube or pitch link so they will have maximum misalignment clearance with the bellcrank clevis or arm (Both rod ends must move "stop to stop"). Collective rigging settings are made by re-adjusting the total length of the pitch links. Adjustments (turns on the upper rod end or hex portion of the pitch link) to each pitch link will be the same. The pitch link length may be adjusted in three ranges; coarse, medium and fine.

Adjustments are made as follows:

a) Coarse length adjustments to the length are made by rotating the coarse-threaded section of the hex portion of the pitch link (the upper rod end is disconnected, the lower rod end remains connected). Loosen the jamnut on the coarse threads only. Increase blade angle by unscrewing the hex from the lower pitch link.

10.002 Rod End Adjustment Procedures For Rigging (cont'd)

Decrease the angle by screwing the hex portion into the barrel. One full turn changes the blade angle by approximately .72 degrees.

b) Medium length adjustments are made by rotating the upper rod end only. Disconnect the rod end from the blade and loosen the rod end jamnuts. Increase blade angle by unscrewing the rod end from the hex portion of the pitch link. Decrease the angle by screwing the rod end into the hex. One full rod end turn changes the blade by approximately .48 degrees.

c) The fine length adjustments are made by rotating only the hexagonal portion of the pitch link. The upper and lower rod ends remain connected. Loosen the jamnuts above the hex. Increase blade angle by screwing the hex out of the lower barrel. Decrease blade angle by screwing the hex into the lower barrel. One full turn of the hex portion changes the blade angle approximately .24 degrees.

5. Torque rod end jamnuts and palnuts per Section 1.300.

10.100 RIGGING

10.110 Main Rotor Flight Controls

10.111 Cyclic Controls

The cyclic control travel is non-adjustable and is controlled by A211-1 stop plate attached to the cyclic box assembly.

NOTE

If the A121-1 push-pull tube length has been changed or the length of the A205 fork was changed, they must be readjusted to the dimensions shown in Figure 8-3.

a) Place the cyclic stick against the aft stop and the collective control full down.

b) Adjust the A121-3 push-pull tube to obtain a clearance of .130 inch between the aft arm of the jack shaft and the main rotor gearbox upper cap flange.

10.111 Cyclic controls (cont'd)

c) Check for clearance between the forward jackshaft arm and the A121-7 push-pull tube guide with collective stick full up and cyclic stick full forward. Minimum clearance is .125 inch.

d) Place the cyclic control in the neutral position. This point is 8.3 inches to the right of full left travel and at the mid-point of the total fore and aft travel. (See Figure 10-1). Place the collective control full down.

e) Apply full cyclic and collective friction.

NOTE

Care must be taken not to move the cyclic control from the neutral position.

10.112 Swashplate

a) With the cyclic and collective controls locked in position per Section 10.111, adjust the A121-7 and A121-5 push-pull tubes to obtain a constant clearance from the A281-1 flange.
The minimum clearance from the flange is 5/8 inches. (See Figure 10-2) Nominal setting is 3/4 inches.

10.113 Collective Control

Since the collective slider stop is non-adjustable, this check is to ensure full control travel is obtained and does not interfere with the swashplate travel.

a) Lift the swashplate boot so the uniball and slider tube may be observed.

b) Pull the collective control full up. The uniball must not extend past the top of the slider tube more than .060 inch. If this occurs, adjust the A121-5 and A121-7 push pull tubes as follows:

1. Turn the upper rod ends of the A121-5 and A121-7 push-pull tubes in equally to lower the swashplate.

2. Recheck the uniball-slider tube clearance per Step b above.

10.120 Main Rotor

The main rotor is rigged by determining the average blade angle. Blade angle measurements are taken at the .75 radius of the main rotor (or 37.75 inches in from the blade tip).

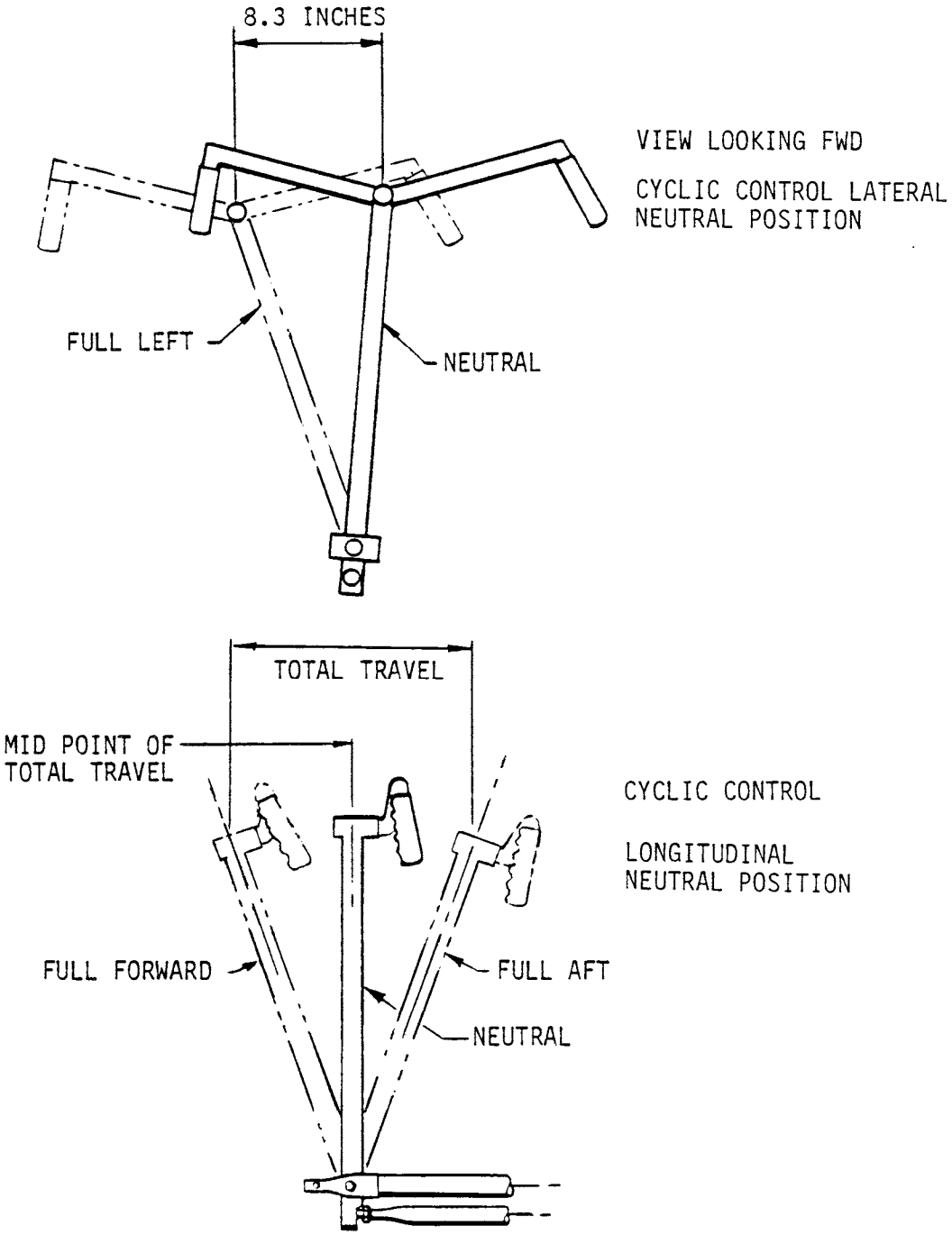

FIGURE 10-1 CYCLIC CONTROL STICK NEUTRAL POSITION

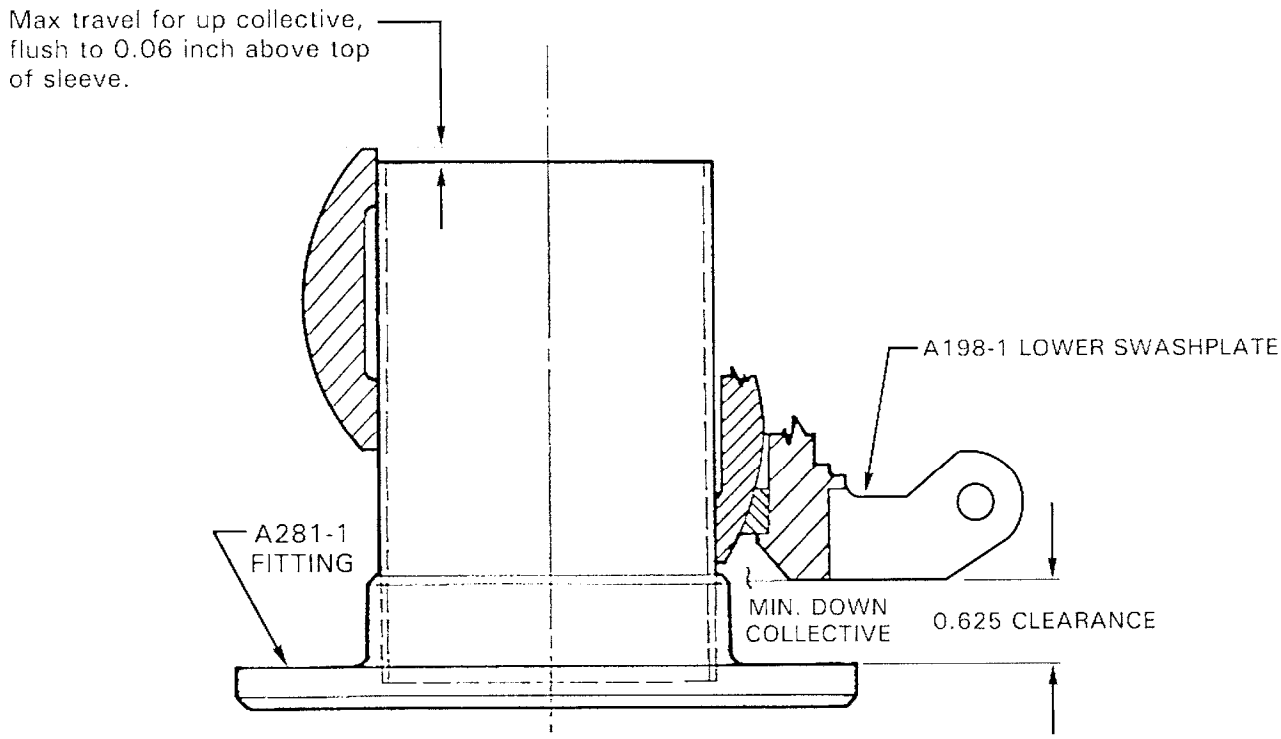

FIGURE 10-2 LOWER SWASHPLATE CLEARANCE

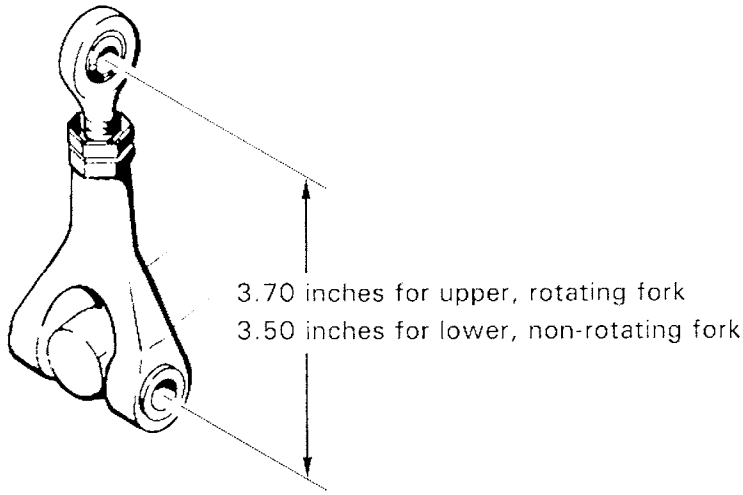

FIGURE 10-3 A205 FORK DIMENSIONS

10.120 Main Rotor

The main rotor is rigged by determining average blade angle. Blade angle measurements are taken at 0.75 radius of main rotor at 37.75 inches in from blade tip.

Main rotor blade angles are measured using MT050-1 rigging fixture and a Kell-Strom KS113 propeller protractor or a comparable protractor (see Figure 10-4). Use following procedure to set up for rigging:

1. Verify A205 forks at swashplate are set to proper length per Figure 10-3. Measuring to bolt bore center lines, lower fork assembly should be 3.50 ± 0.03 inches and upper fork assembly should be 3.70 ± 0.03 inches.

2. Level rotorcraft per Section 1.220 Method 2, Main Rotor Hub.

3. Place a tracking stick at end of one rotor blade and mark height of blade tip. Rotate rotor 180° and mark height of opposite blade tip. Teeter main rotor as necessary to obtain a main rotor track of ± 1 inch.

4. Zero propeller protractor to main rotor hub at location marked "Level Here". The protractor must be placed parallel to teeter hinge bolt.

> NOTE
>
> When zeroing protractor, face or dial must always face one rotor blade to avoid doubling of instrument error. Mark this blade with a piece of tape. When making blade angle readings, face or dial of protractor should always face marked blade.

5. Measure in from tip of each main rotor blade 37.75 inches and place masking tape chordwise across each blade with center of tape over 37.75 inch mark.

> **WARNING**
>
> **Use a grease pencil or soft marker to mark rotor blades. Ball point pens or other sharp instruments can scratch blade skins, causing cracks and fatigue failure of blade.**

Mark each rotor blade with a different color designation, such as red or blue, to be used in recording blade angles.

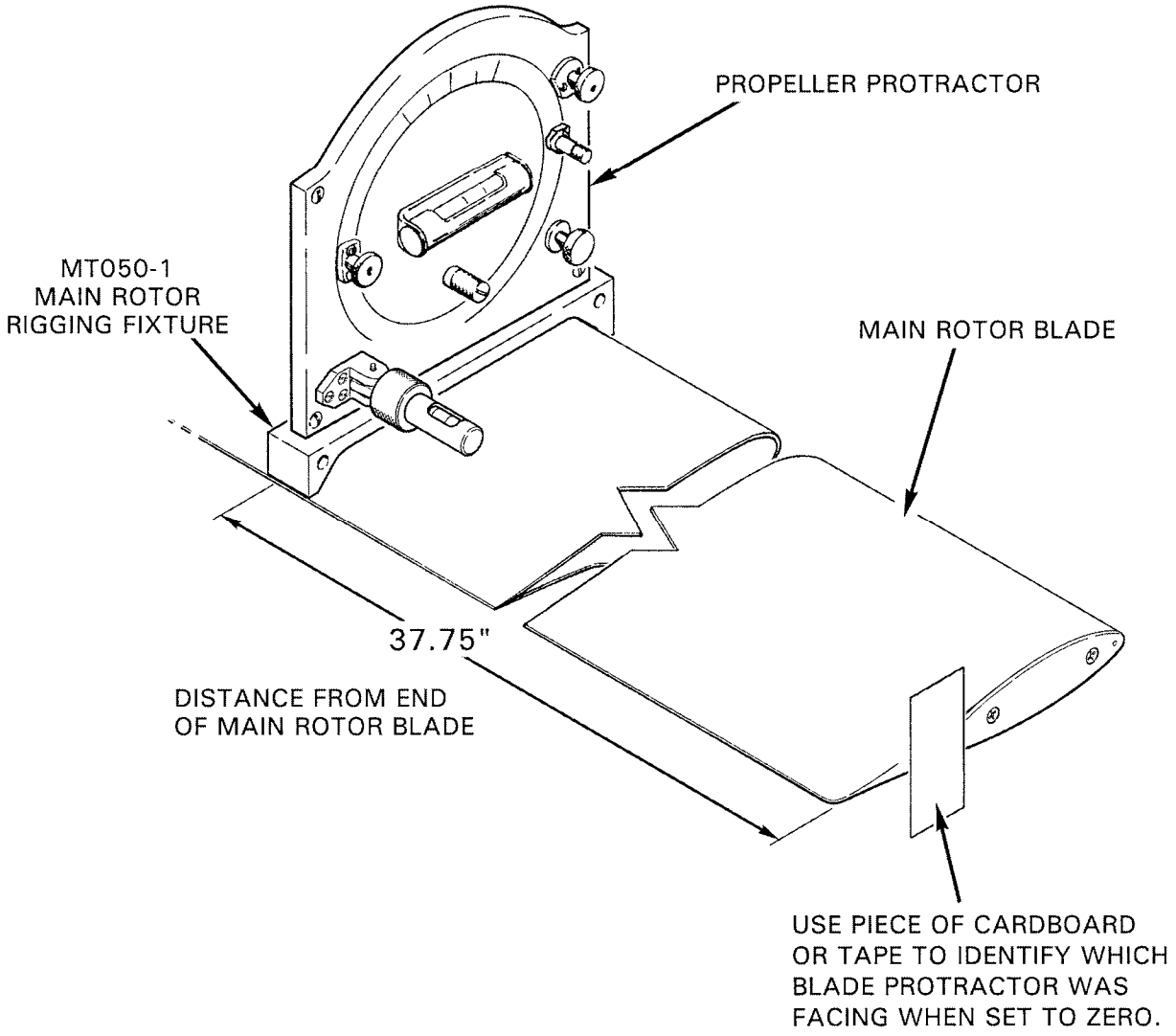
PROPELLER PROTRACTOR
MT050-1
MAIN ROTOR
RIGGING FIXTURE
MAIN ROTOR BLADE
37.75"
DISTANCE FROM END
OF MAIN ROTOR BLADE
USE PIECE OF CARDBOARD
OR TAPE TO IDENTIFY WHICH
BLADE PROTRACTOR WAS
FACING WHEN SET TO ZERO.

10.121 Cyclic Travel Rigging

> NOTE
>
> Adjust collective travel rigging before cyclic travel rigging.

1. Place collective control full down. Place cyclic control in the neutral position laterally (8.3 inches to the right of full left travel) and hold against forward stop.

> NOTE
>
> Sand bags may be used to secure the cyclic control against the forward stop to ensure it will not move.

2. Rotate blades so the pitch links are aligned with the longitudinal axis of the helicopter. Place the tracking stick at one of the blade tips for reference when rotating the rotor.

3. Forward longitudinal cyclic:

   a. Measure blade angles and record below. Rotate rotor 180° and record blade angles below.

Blue Blade Position	Cyclic Full Forward	
Pitch horn aft	_____	°nose up
Pitch horn fwd	+ _____	°nose down
	_____	° ÷ 2 = _____ °

R22, R22HP 8.3/8.8 degrees required
R22 Alpha, Beta 10.5/11.0 degrees required

Red Blade Position	Cyclic Full Forward	
Pitch horn aft	_____	°nose up
Pitch horn fwd	+ _____	°nose down
	_____	° ÷ 2 = _____ °

R22, R22HP 8.3/8.8 degrees required
R22 Alpha, Beta 10.5/11.0 degrees required

   b. Adjust aft swashplate push-pull tube as required (one full turn = 0.42°) to obtain blade angle averages between 8.3° and 8.8°. Additional coarse adjustment is available by simultaneously adjusting the two forward push-pull tubes but they both must be adjusted exactly the same amount.

4. Aft longitudinal cyclic:

   a. Place cyclic control in the neutral position laterally and hold against aft stop.

   b. Measure blade angles and record below. Rotate the rotor 180° and record blade angles below.

10.121 Cyclic Travel Rigging (cont'd)

4. Aft longitudinal cyclic:

Blue Blade Position	Cyclic Full Aft
Pitch horn aft	_____°nose down
Pitch horn fwd	+_____°nose up
	°÷2=_____°
	(8.5/9.0 deg. req'd)

Red Blade Position	Cyclic Full Aft
Pitch horn aft	_____°nose down
Pitch horn fwd	+_____°nose up
	°÷2=_____°
	(8.5/9.0 deg. req'd)

c) Adjust the aft swashplate push-pull tube as required (one full turn = .42°) to obtain blade angle averages between 8.5° and 9.0°. Additional coarse adjustment is available by simultaneously adjusting the two forward push-pull tubes but they both must be adjusted exactly the same amount.

NOTE

If adjustment is required to obtain aft cyclic control blade angles, the forward cyclic must be rechecked.

5. Left lateral cyclic:

a) Place the cyclic control in the neutral position longitudinally (mid travel) and hold the cyclic against the left stop.

b) Rotate the rotor until the pitch links are aligned with the lateral axis of the helicopter. Place the tracking stick at the end of one blade for reference.

c) Measure the blade angles and record below. Rotate the rotor 180° and record the blade angles below.

10.121 Cyclic Travel Rigging (cont'd)

Blue Blade Position	Cyclic Full Left
Pitch horn on right	_____°nose up
Pitch horn on left	+_____°nose down
	_____°÷2=_____°
	(9.0/9.5 deg. req'd)

Red Blade Position	Cyclic Full Left
Pitch horn on right	_____°nose up
Pitch horn on left	+_____°nose down
	_____°÷2=_____°
	(9.0/9.5 deg. req'd)

d) Adjust either of the two forward push-pull tubes as required (one full turn = .6 deg.) to obtain blade angle averages between 9.0° and 9.5°.

6. Right lateral cyclic:

a) Place the cyclic control in the neutral position longitudinally (mid travel) and hold against the right stop.

b) Measure the blade angles and record below. Rotate the rotor and record the blade angles below.

Blue Blade Position	Cyclic Full Right
Pitch horn on right	_____°nose down
Pitch horn on left	+_____°nose up
	_____°÷2=_____°
	(5.5/6.0 deg. req'd)

Red Blade Position	Cyclic Full Right
Pitch horn on right	_____°nose down
Pitch horn on left	+_____°nose up
	_____°÷2=_____°
	(5.5/6.0 deg. req'd)

10.121 Cyclic Travel Rigging (cont'd)

c) Adjust either of the two forward push-pull tubes as required (one full turn = .6 deg.) to obtain blade angle averages between 5.5° and 6.0°.

NOTE

If adjustment is required to obtain right cyclic control blade angles, the left cyclic must be rechecked.

10.122 Collective Travel Rigging

1. Place the cyclic control in the neutral position (See Figure 10-1). Place the collective control full down. Apply full cyclic and collective friction.

2. Rotate the main rotor to align the pitch links with the longitudinal axis of the rotorcraft. Place the tracking stick at the end of one blade to be used as a reference point when turning the rotor.

3. Measure the blade angles using the MT050-1 rigging fixture and propeller protractor.

NOTE

The MT050-1 fixture is placed on top of the blade so it straddles the tape at the 37.75 inch station. The fixture must be held tightly against the leading edge to ensure accurate readings. The face of the protractor must face the marked blade when taking readings. (See Section 10.120, Step 2).

Record blade angles, then rotate rotor 180° and again record angles. Adjust the pitch link of each blade until the two blade angles are within 0.2 degrees of each other when the blade pitch link is in the forward position. Check the blade angles with each blade pitch link aft. These angles must be within 0.2 degrees also.

10.122 Collective Travel Rigging (cont'd)

COLLECTIVE FULL DOWN

Blue Blade	Red Blade
(PHF) Pitch Horn Fwd._____°nose up	(PHF)_____°nose up
(PHA) Pitch Horn Aft._____°nose up	(PHA)+____°nose up
_____°÷2=_____°	____°÷2=___°

4. Pull the collective control to the full up position. Apply full collective friction. Measure the blade angles per Step 3 above and record in the chart below.

Blue Blade_____°nose up	Red Blade_____°nose up
(Low pitch setting 2°) nose up.	(11°/12° above low) pitch setting.

10.130 Tail Rotor Flight Controls

10.131 Pedals (See Figure 10-5)

Pedal rigging is accomplished as follows:

1. Insert a 3/16-inch diameter rigging pin through the hole in the right-hand keel panel and the rigging pin holes in the A317-1 bellcrank.

2. Adjust the A121-9 and -11 push-pull tubes as required to obtain a dimension of 2.90 inches from each pedal to the stops located on each side of the forward console.

10.132 A316 Bellcrank (See Figure 10-5)

Remove the rigging pin and place the left pedal against its stop. Adjust the A121-13 push-pull tube to obtain a minimum of .060 inches between the A316-1 bellcrank arm and the vertical firewall control tunnel.

10.133 A331 Bellcrank

Place the right pedal against its stop. Adjust the A121-15 push-pull tube to obtain a minimum clearance of .100 inches between the A331-1 bellcrank and the actuator gearbox housing (See Figure 10-6).

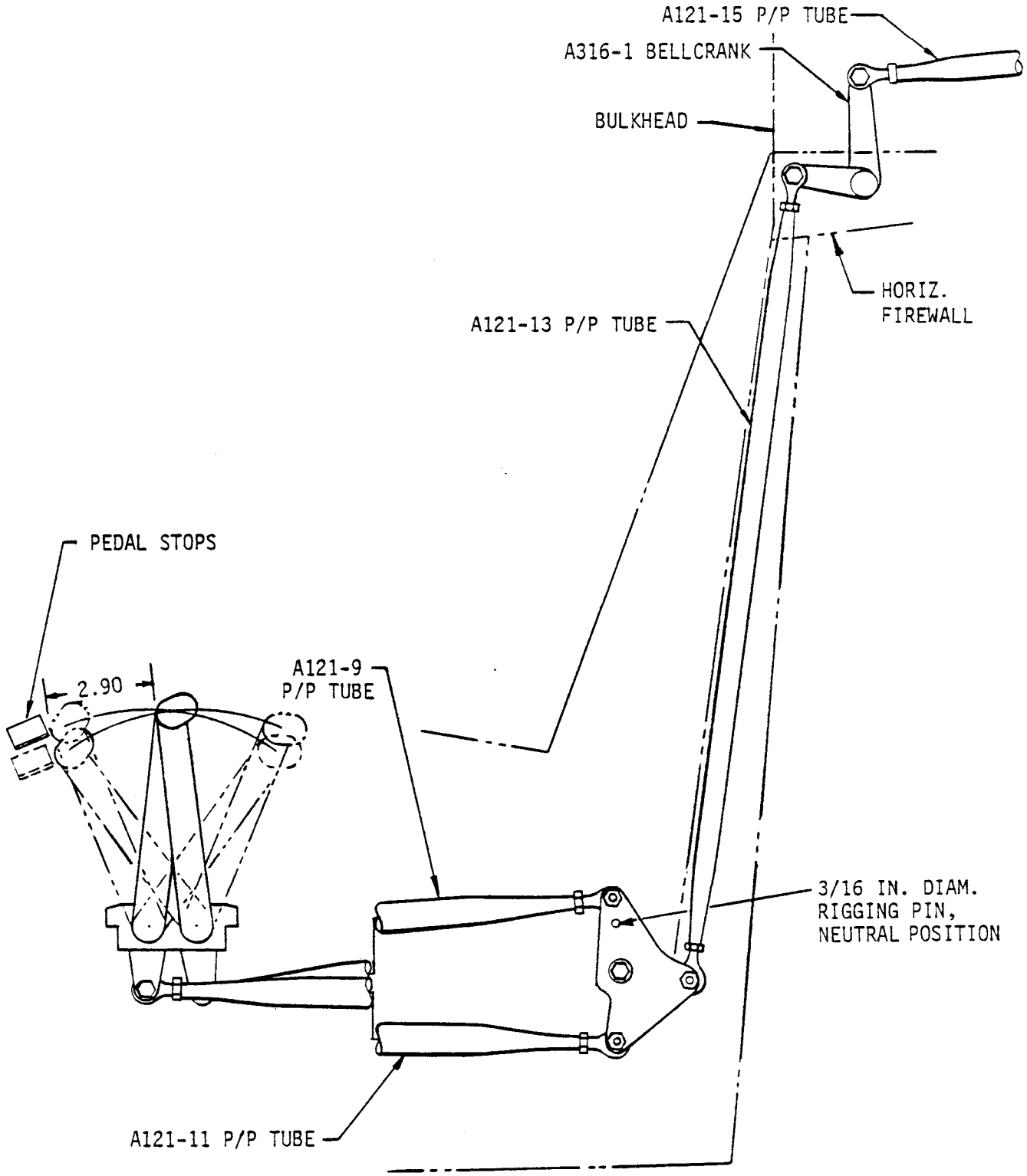

FIGURE 10-5 PEDAL CONTROL INSTALLATION

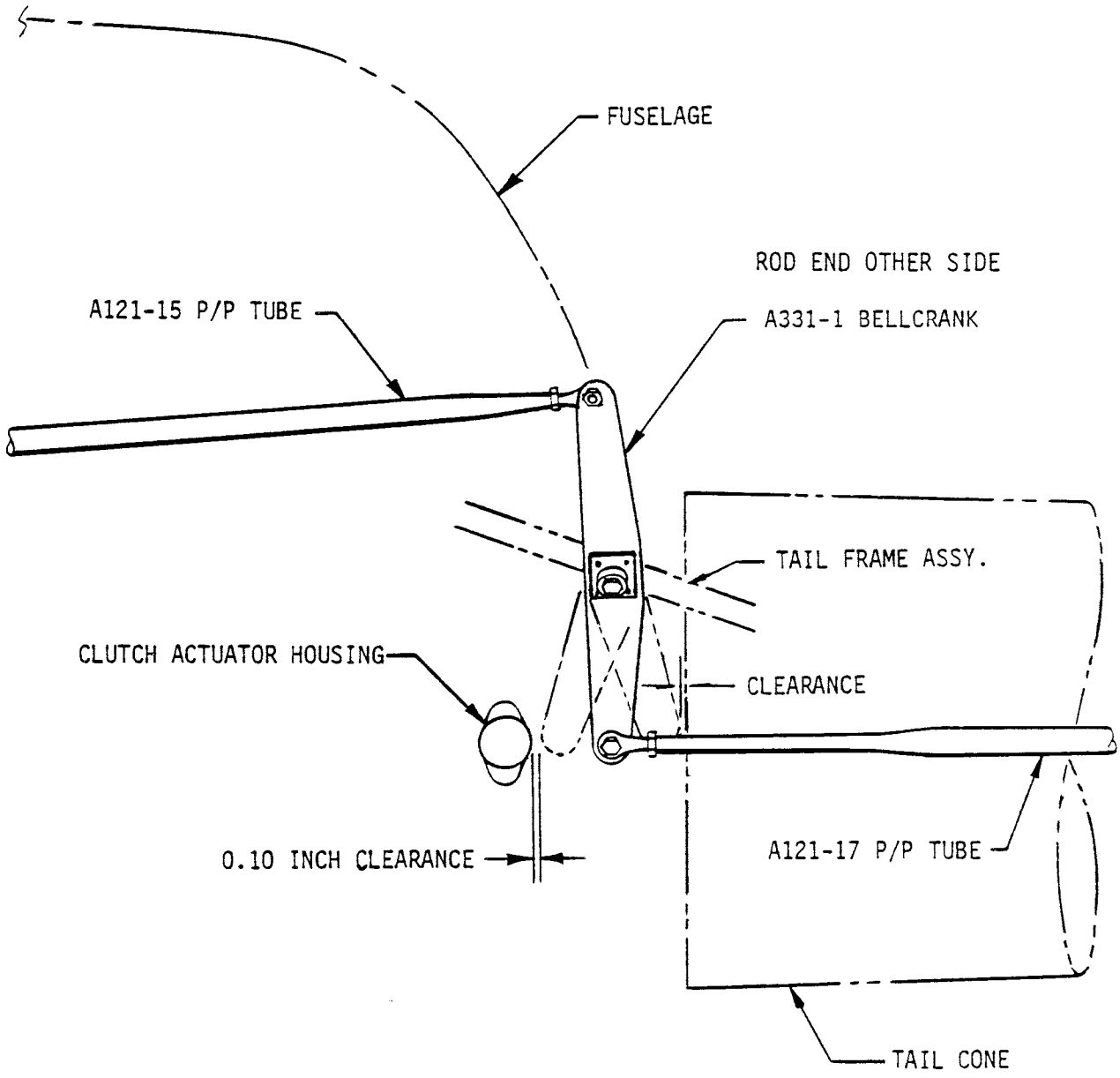

VIEW LOOKING DOWN

FIGURE 10-6 A331 BELLCRANK INSTALLATION

10.133 A120-3 Bellcrank (cont'd)

> NOTE
>
> Actuator must be disengaged when adjusting A331 bellcrank to check closest point.

Place left pedal against its stop and check for clearance between A331-1 bellcrank and tailcone.

10.134 A120-1 Bellcrank

With tail rotor pedals in neutral position, adjust A121-17 push-pull tube as required to obtain a nominal dimension of 4.85 inches between bellcrank arm center line and machined face of tailcone casting (see Figure 10-7).

10.135 Tail Rotor Pitch Links

If applicable, adjust pitch links to a dimension of 2.360 inches between rod end centers (See Section 8.570).

10.140 Tail Rotor Rigging

> **WARNING**
>
> **Both pitch links must be same part number (same type and material). Mixing one-piece with adjustable-length pitch links is prohibited. Mixing steel one-piece with aluminum one-piece pitch links is prohibited.**

1. Set up:

   a. Ensure removable pedals are installed.

   b. Level rotorcraft per Section 1.220 Method 2, Main Rotor Hub.

   c. Rotate tail rotor until forward blade is parallel to tailcone.

   d. Tape a tracking stick to tailcone at tip of forward blade.

> NOTE
>
> A tracking stick can be made using a 1 inch by 12 inch strip of aluminum with a 90° bend 2 inches from one end.

   e. Place left pedal against its stop. Using a tip drain hole as a reference, first mark tracking stick where blade tip passes stick.

   f. Using clutch shaft so teeter angle is not disturbed, rotate tail rotor 180° until opposite blade tip drain hole is aligned with tracking stick. Mark stick.

10.140 Tail Rotor Rigging (cont'd)

g. Adjust teeter of tail rotor to position blade tip mid point between marks. This will be the left-pedal tacking mark. Rotate tail rotor and check that the blades track. Repeat above procedure as necessary to track tail rotor within 0.125 inch.

2. Measure tail rotor blade angles as follows:

a. Using a soft marker or grease pencil mark each blade as red or blue.

b. Measure in from each blade tip 5.25 inches (0.75 radius) and place a mark chordwise on each blade at this point (soft marker or grease pencil).

c. Have some one hold forward blade tip at left pedal track mark.

d. Place MT050-2 rigging fixture on aft blade inboard side.

NOTE
The MT050-2 fixture must be centered on 0.75 radius mark.

e. Using a propeller protractor measure blade angle and record below. Rotate tail rotor 180° and record opposite blade angle.

Pedals Full Left

Blue Blade		_____ °nose right
Red Blade	+	_____ °nose right
	=	_____ °
	÷2 =	_____ °
		(19.0°/19.5° required)

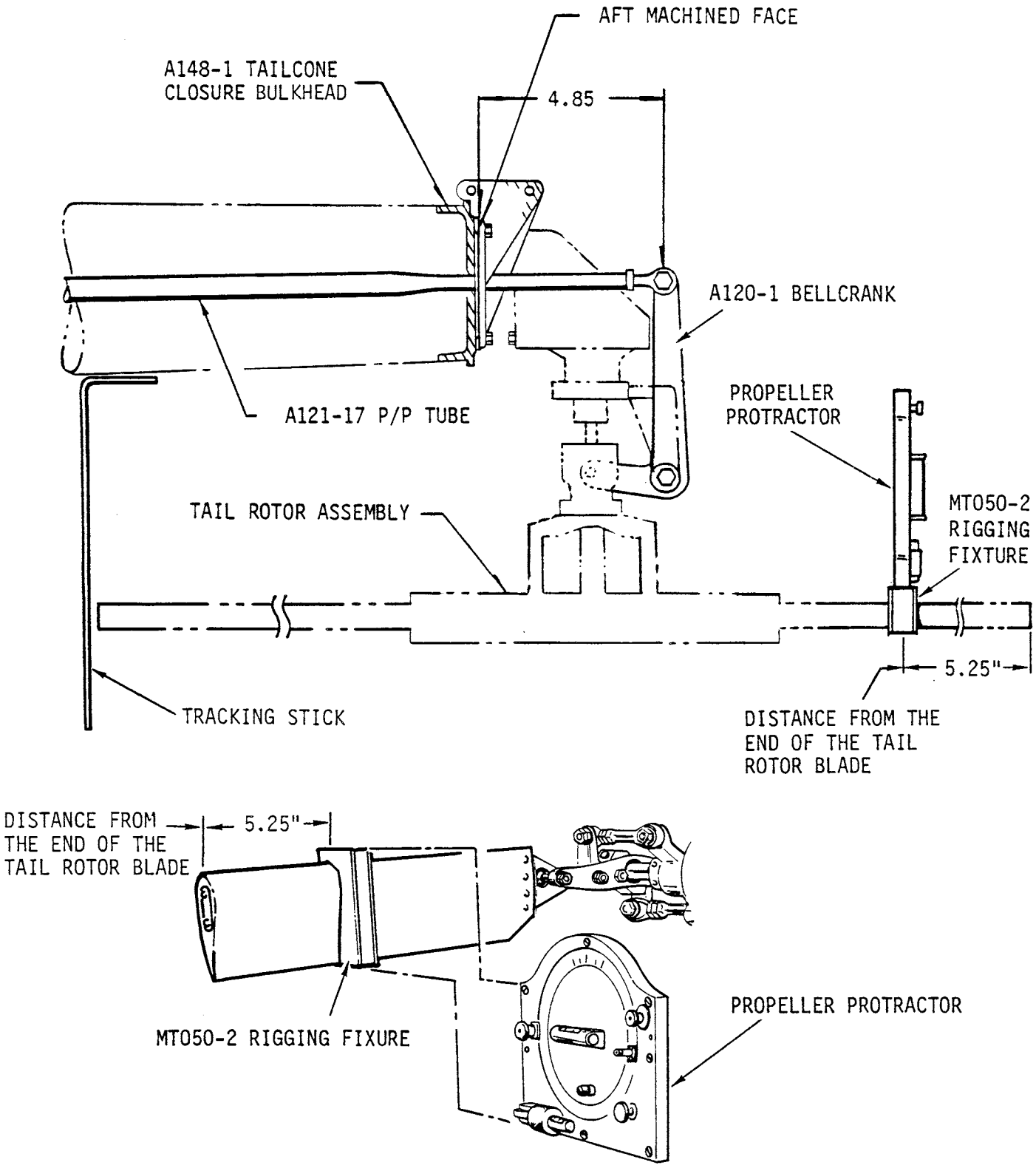

FIGURE 10-7 A120-1 BELLCRANK INSTALLATION

10.140 Tail Rotor Rigging (cont'd)

CAUTION

For acceptable track, differences between Blue and Red blade angles must not exceed .4 degrees. If the blade angles cannot be adjusted to within .4 degrees of each other using the pitch links they should be replaced.

NOTE

Pitch link jamnuts must be tight to ensure accurate blade angle measurements.

f) Adjustment of the blade angles is made using the rod ends of the A121-17 push-pull tube. One full turn of the rod end will change the blade angles .42 degrees. Adjust the rod end as necessary to obtain 19.0 to 19.5 degrees.

g) Place the right pedal against its stop. Measure the blade angles and record below.

NOTE

When pedal is placed against the right stop, a new tracking mark must be placed on the track stick as the tip path will change due to blade angle change.

	Pedals Full Right
Blue Blade	_____ °nose left
Red Blade	+ _____ °nose left
	_____ °÷2= _____ °
	(9.6/10.6 deg. req'd)

h) Adjust the A121-17 push-pull tube as necessary to obtain blade angles of 9.6 to 10.6 degrees.

NOTE

If adjustment is required to obtain right pedal blade angles, the left pedal angles must be rechecked.

10.140 Tail Rotor Rigging (cont'd)

i) If the blade angle range, for left and right pedal settings, cannot be obtained using the above procedure, this indicates the pedal travel is either too great or too small. Use the following procedure to check and adjust pedal travel:

1) Add the right and left pedal angles together. If the total is less than 28.6° the pedal total travel is too small. If the total is greater than 30.1° the total travel is too great.

2) To increase the total travel, lengthen the A121-9 and -11 push-pull tubes attached to the tail rotor pedals.

3) To decrease the total travel, shorten the A121-9 and -11 push-pull tubes.

NOTE

These changes should be made in 1/2 turn increments of the push-pull tube rod ends.

4) Recheck the tail rotor blade angles per steps e through h above.

j) Ensure all rod ends are installed properly by checking the push-pull tube witness holes. Tighten all rod end palnuts and jamnuts. Torque stripe all jamnuts.

10.150 Throttle Correlation Rigging (See Figure 10-8)

a) For inservice check and adjustment, perform the following:

1) Rotate the throttle in "off" direction through the overtravel spring to the positive stop.

2) Holding the throttle tight against the stop, raise collective to full up stop while observing throttle bellcrank on carburetor. Throttle bellcrank should just barely start to move when the collective up stop is reached.

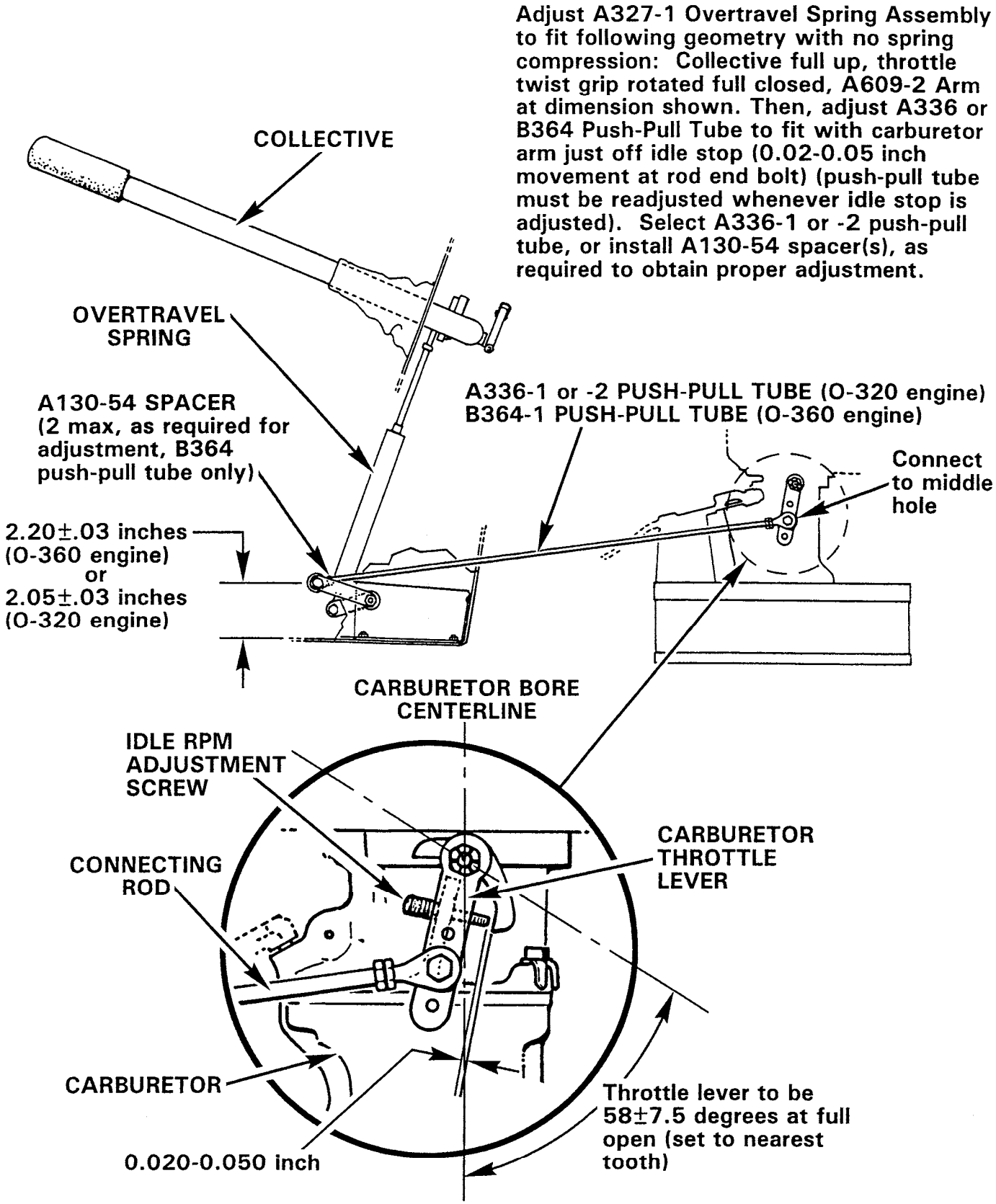

FIGURE 10-8 THROTTLE CORRELATION RIGGING

10.150 Throttle Correlation Rigging (cont'd)

NOTE

Before adjusting throttle connecting rod, ensure idle RPM and engine shimming are correctly adjusted per Sections 2.210 and 6.130.

3. See Figure 10-8. If required, adjust length of throttle connecting rod for 0.010-0.050 inch gap between carburetor butterfly bellcrank and idle RPM adjustment screw when performing step 2.

4. Tighten jamnut(s), check witness holes, and safety wire rod end.

10.200 TRACK AND BALANCE

Chadwick-Helmuth Vibrex or equivalent equipment is required to perform main rotor in-flight track check and dynamic balancing of main and tail rotors.

10.210 Equipment Requirements

The following list of equipment may be used for R22 track and balance:

a) Chadwick-Helmuth Balancer Model Number:
177M05
177M-6
177M-6A
2000 - series
8350 - series
8500 - series
M192 - series

10.210 Equipment Requirements (cont'd)

a) Model Number 177M-7
177M-7A

b) Strobex

Model Number 135M-10*
135M-10A*,B* and C*
135M-11

*When tracking the main rotor using the 135M-10 Series Strobex a double interrupter must be used.

c) Cables, accelerometers, pickups and targets.

Model Number	3140	D.C. Adapter Cable
	3030	Magnetic pickup
	3319-1	Magnetic cable
	4177	Accelerometer
	4296-1 and 2	Accelerometer Cable
	3300	Target Patches
	4270	Target Patches

d) Brackets

Robinson PT121 Magnetic Pickup Bracket

e) Charts

Robinson Main Rotor Chart
Tail Rotor Chart

10.220 Equipment Installation

10.221 Main Rotor Equipment Installation (See Figure 10-9A)

Install the Chadwick Helmuth equipment for Main Rotor Track and Balance as follows:

a) Install the 4177 accelerometer under the left console attachment screw with cable connector end down.

b) Install PT121 bracket onto the lower right-hand side of the swashplate.

10.221 Main Rotor Equipment Installation (cont'd)

> **WARNING**
>
> Ensure attachment bolts are torqued to 100 in.-lbs plus nut drag. The PT121 bracket will remain installed for inflight track and balance.

c) Install the 3030 magnetic pickup onto the PT121 bracket. Set the interrupter pickup gap to .030" ± .010".

d) Attach the 3319-1 cable to the magnetic pickup. Pull collective stick full up and cyclic stick full left. Secure the cable to the mast fairing with duct tape. Route the cable to the lower front of the left door frame. Secure the cable every 12" with duct tape.

> **CAUTION**
>
> Security of the cable is essential as the helicopter will be flown at Vne.

e) Attach the 4296-1 cable to the accelerometer mounted on the console. Secure with duct tape.

> **CAUTION**
>
> Ensure the cable cannot become tangled with tail rotor pedals.

f) Attach the cables to the balancer and secure excess cable to the bracket in front of the left seat.

g) Apply the 4270 target tapes to the main rotor blades per Figure 10-9.

10.222 Tail Rotor Equipment Installation (See Figure 10-9C)

a) Install the 4177 accelerometer under the top forward tail rotor gearbox output cartridge attachment bolt. Connector end of accelerometer must point up.

b) Connect the 4296-2 cable to the accelerometer. Wrap cable around the tailcone several times towards the forward end. Secure with duct tape.

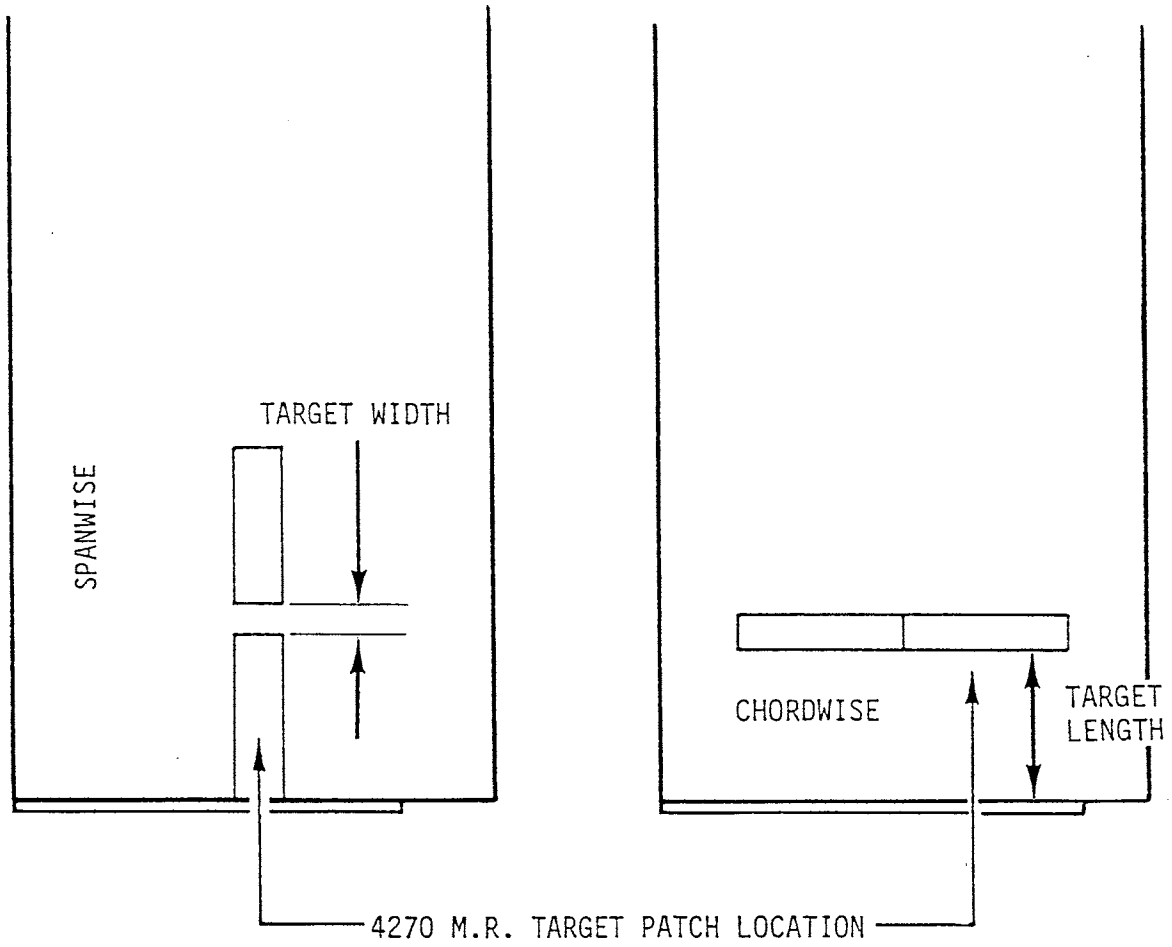

FIGURE 10-9 MAIN ROTOR TARGET PATCH LOCATION

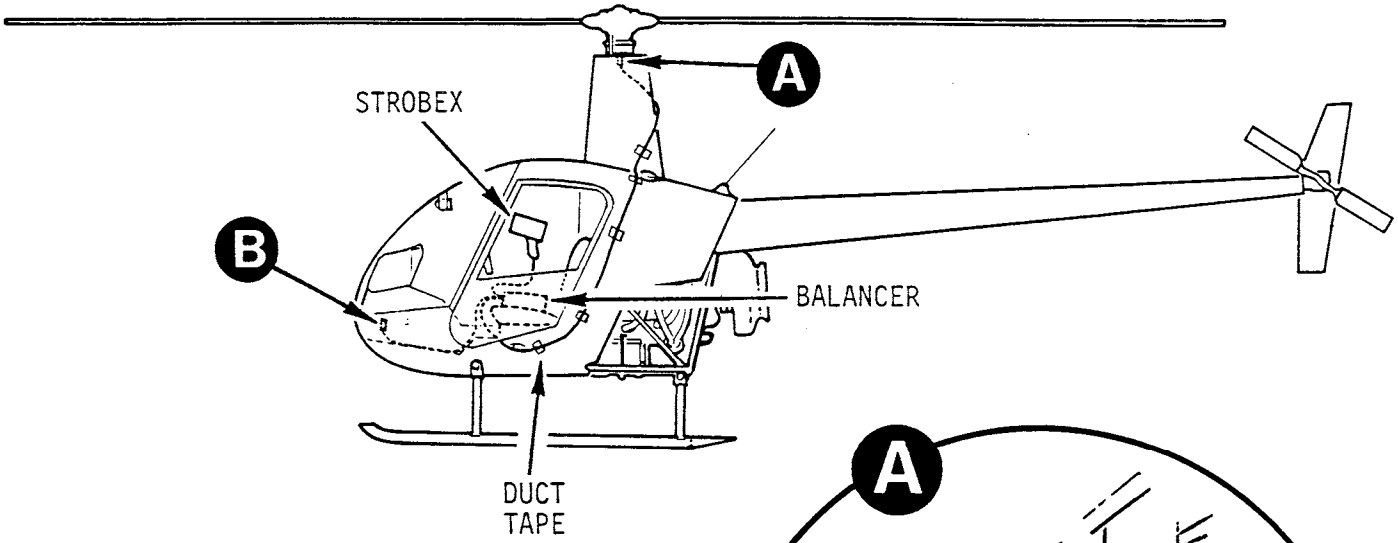

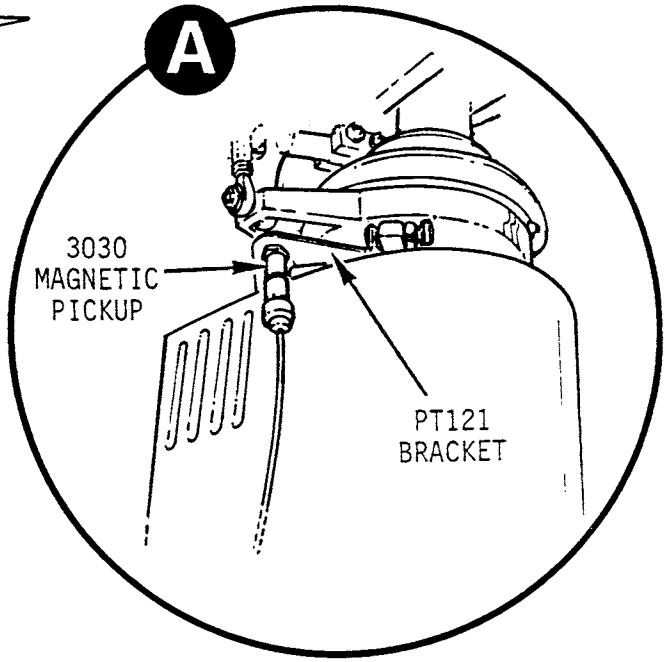

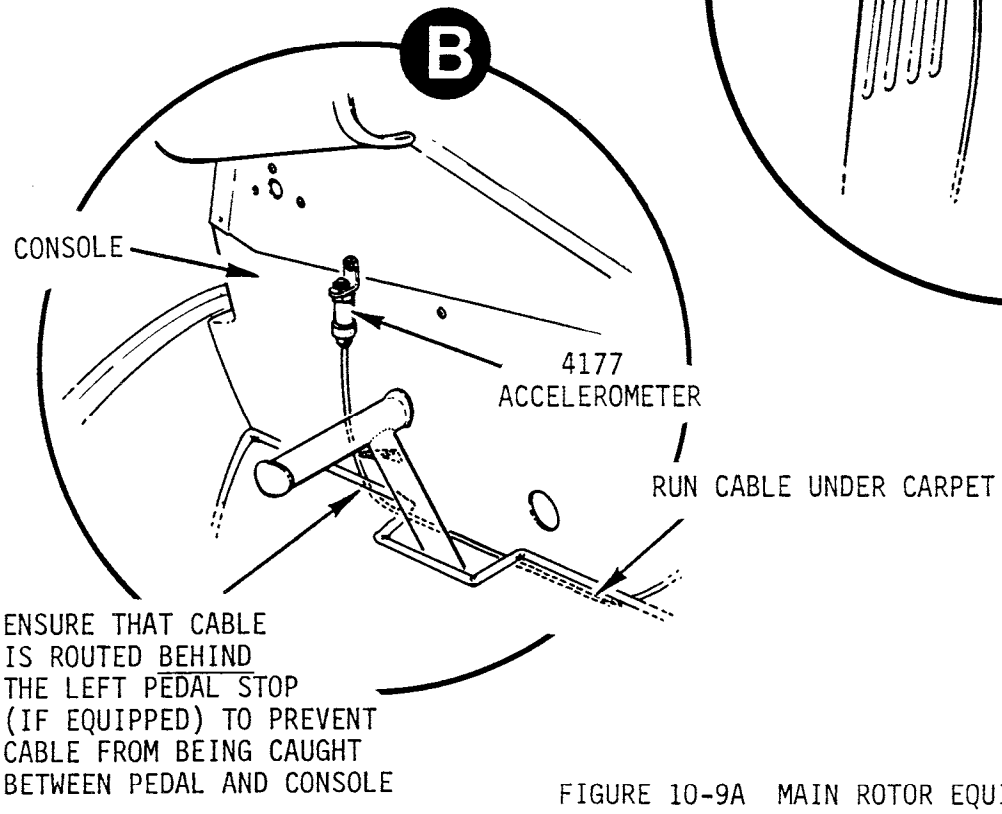

FIGURE 10-9A MAIN ROTOR EQUIPMENT INSTALLATION

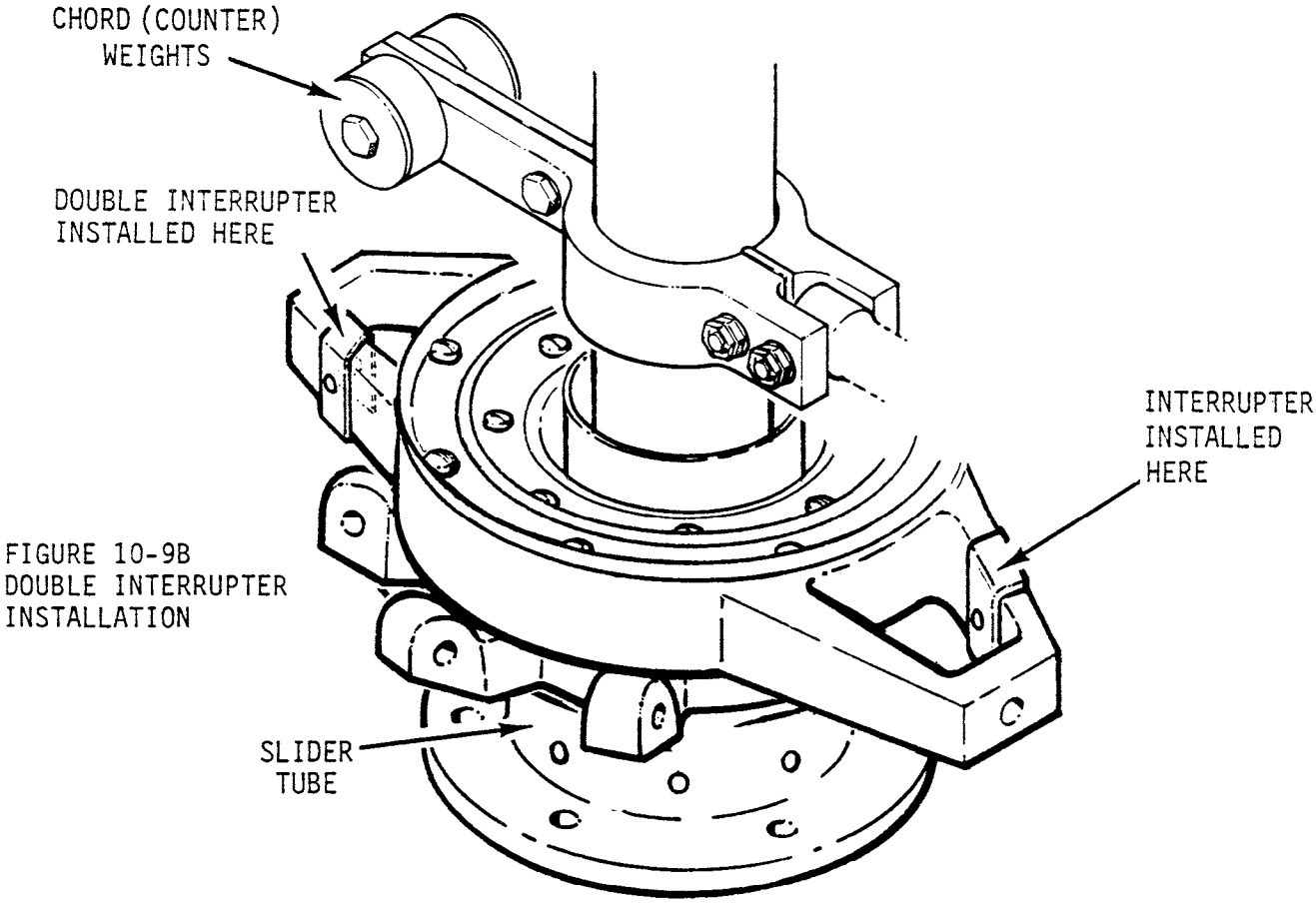

FIGURE 10-9B
DOUBLE INTERRUPTER
INSTALLATION

If the interrupters are installed as shown above the Main Rotor Balancing Chart will be out of phase.

Using a model 135M-10 Strobex with the interrupters installed per above drawing and using Doubler Interrupter Logic on the Balance Box, the Forward Blade must be relabeled as Aft. The Aft Blade must be relabeled Forward. Adding and subtracting chord weights and rotor head shifts would also be out of phase.

To use the Main Rotor Track and Balance Chart without correcting it, you must reverse the interrupters. The double interrupter must be on the opposite side of the driveshaft as the Chord (counter) weights.

This page intentionally left blank.

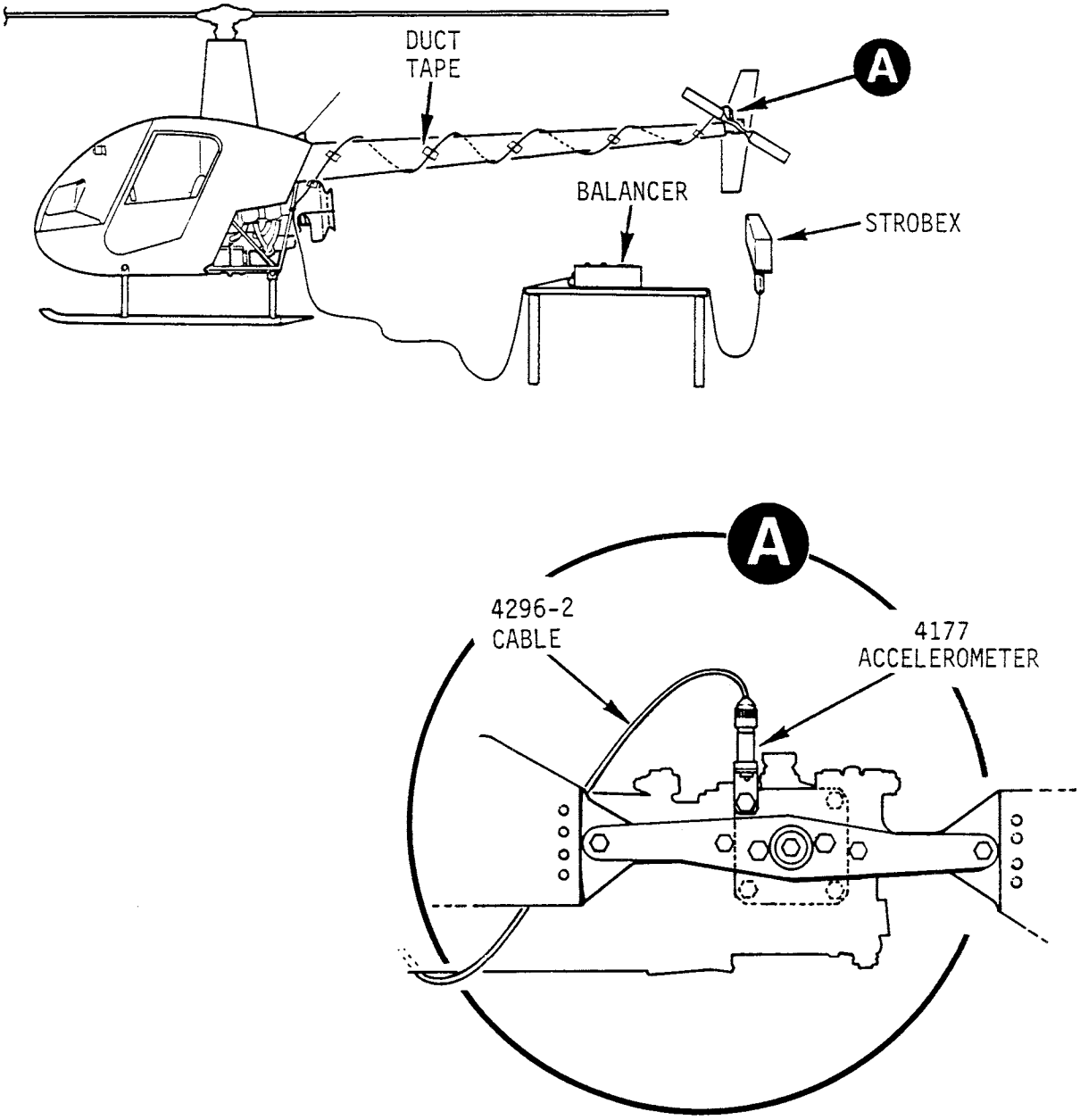

FIGURE 10-9C TAIL ROTOR EQUIPMENT INSTALLATION

10.222 Tail Rotor Equipment Installation (cont'd)

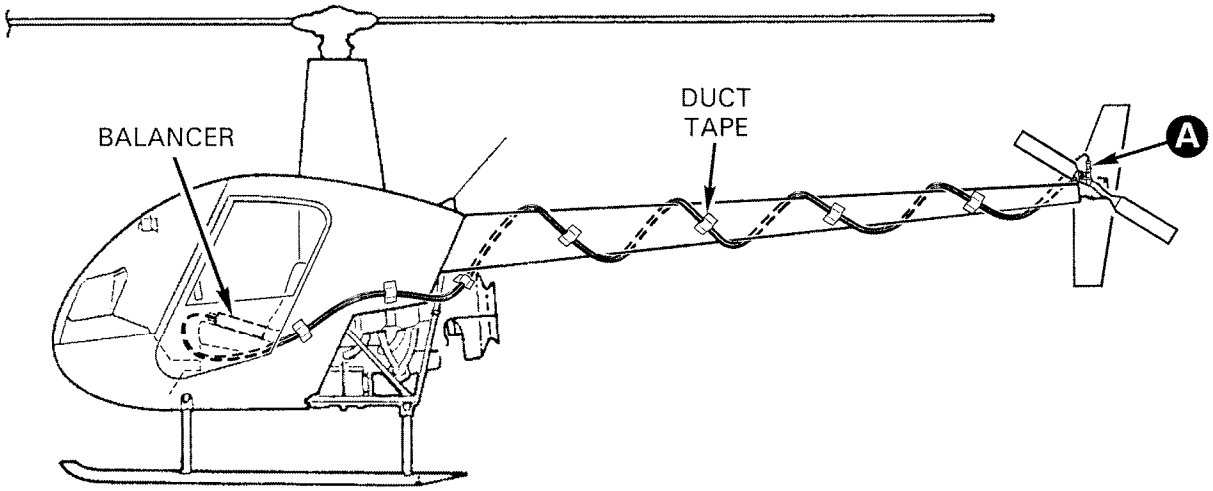

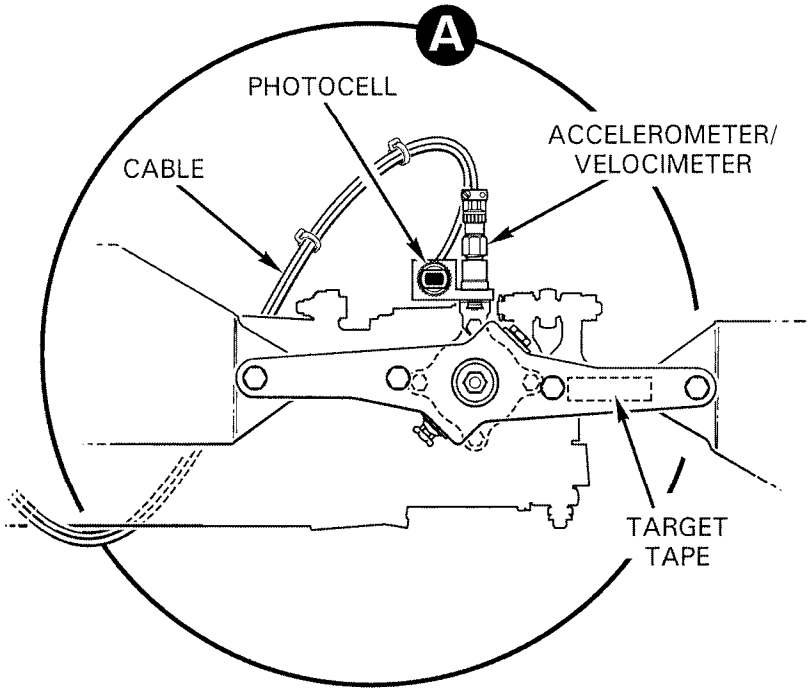

WARNING

Tail rotor balancing equipment must be removed for flight.

FIGURE 10-9C TAIL ROTOR BALANCING EQUIPMENT INSTALLATION

10.222 Tail Rotor Equipment Installation (cont'd)

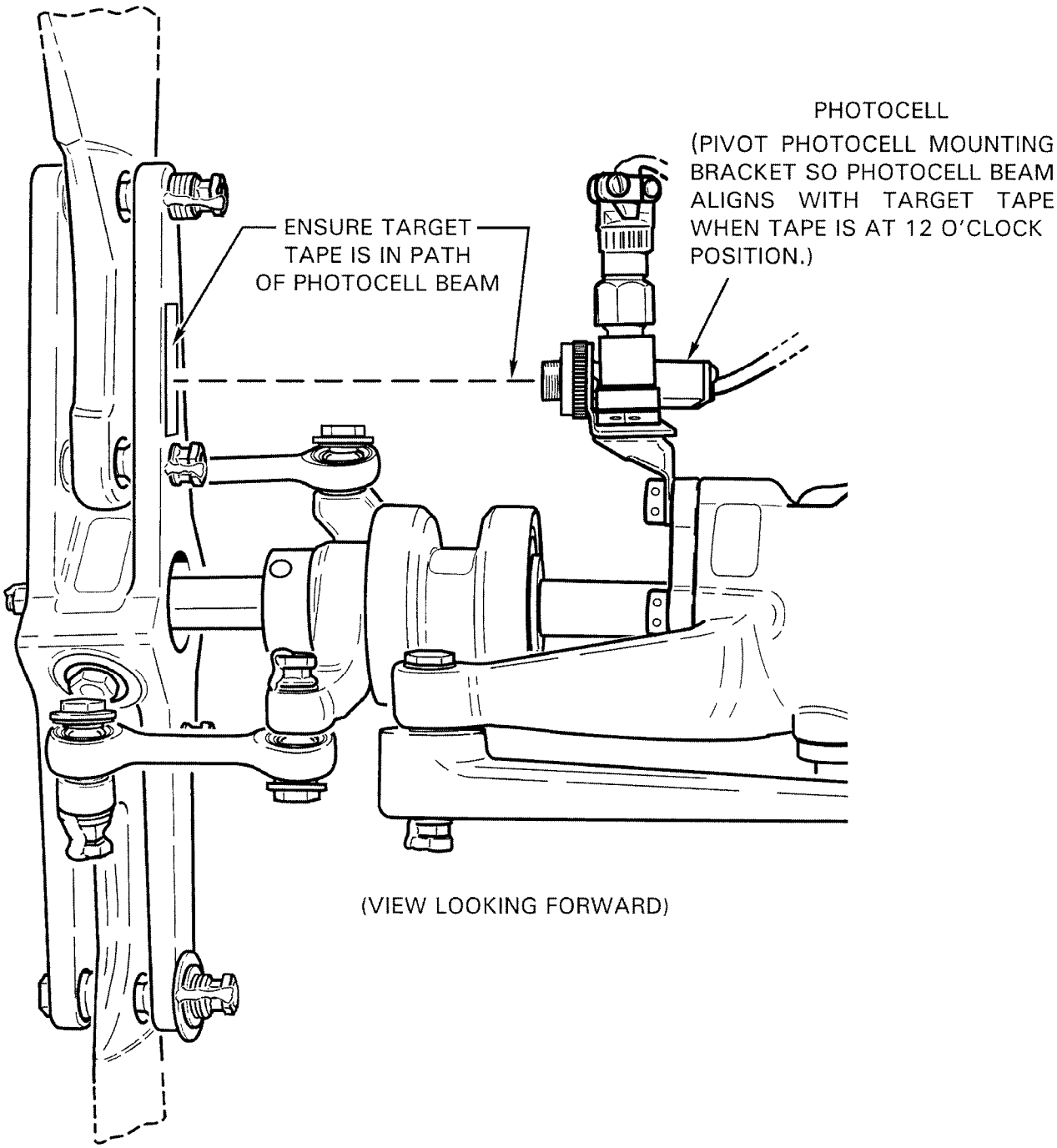

WARNING

Tail rotor balancing equipment must be removed for flight.

FIGURE 10-9D TAIL ROTOR PHOTOCELL INSTALLATION

10.222 Tail Rotor Equipment Installation (cont'd)

c) Place a target tape on tail rotor hub inboard surface approximately 1 inch in from on blade's outboard attach bolt.

> **CAUTION**
>
> Ensure cables cannot become entangled in tail rotor.

d) Refer to Figures 10-9C and 10-9D. Install and secure photocell and mounting bracket to velocimeter bracket as shown. Connect extension cable to photocell and wrap cable several times around tailcone and secure with duct tape.

e) Connect cables to balancer.

10.230 Main Rotor Track and Balance Procedure

> NOTE
>
> Prior to installing balancing equipment, verify blades are clean and smooth, rod ends & spherical bearings & scissors play are within limits, correct upper (rotating) scissors friction, correct swashplate tilting friction, and correct teeter and coning hinge frictions. Verify interrupter is opposite chord arm.

In-flight track and balance is accomplished using the following testing and adjustment sequence:

1. Check main rotor track in a hover. When using Vibrex 177- or 8350- series equipment, place Function knob in track position, RPM (flash rate) on Strobex to 424. Adjust track by shortening high blade pitch link per Section 10.232 to bring track within 0.25 inch.

2. Check main rotor balance in a hover. For Vibrex 177- or 8350- series equipment, place Function knob in "A" position, RPM on Phazor to 530. Adjust balance as indicated by main rotor balance chart 0.2 IPS.

3. Fly the helicopter at 50, 60, 70, 80, 90, and 100 knots. Check track at each airspeed and record.

> **WARNING**
>
> **Do not exceed Vne of helicopter when checking in-flight track.**

4. Make slight tab adjustment to correct for a climbing blade by bending trim tab down per Section 10.233.

5. Repeat Steps 3 & 4 as required until track is within 3/8 inch at all airspeeds.

6. Readjust main rotor balance in an hover to no greater than 0.2 IPS.

7. Check autorotational RPM per Section 10.250. Adjust as required.

8. Evaluate collective trim, longitudinal cyclic trim, and lateral cyclic trim. Adjust as required.

9. Check main rotor balance in an hover. Verify no greater than 0.2 IPS. Adjust as required.

10.231 Main Rotor Balance Adjustments

Spanwise balance adjustments are made by adding or subtracting weight as indicated by the balance chart. Weight is changed by removing the blade tip cover and changing A298 tip weights. Fine adjustments may be made with AN960-10 or AN960-10L washers and also by trimming washers.

Coarse adjustment of chordwise balance is accomplished by shifting rotor hub (see Section 9.124) as indicated on balance chart. Fine adjustment of chordwise balance is accomplished by adding or subtracting A255-1 or -2 chord weights or AN970-4 washers as indicated by balance chart. A maximum of two A255-2 weights (two A255-2 weights equal six A255-1 weights) may be installed.

Three A255-1 weights = One A255-2 weight

Eight AN970-4 washers = One A255-1 weight

10.232 Main Rotor Pitch Link Adjustment

Two adjustments can be made to change main rotor pitch link length. Coarse adjustments are made by loosening the upper rod end jam nut, disconnecting the rod end from the blade pitch horn, and turning the rod end up or down (one-half turn of rod end changes track approximately 0.25 inch).

Fine adjustments are made by leaving the upper rod end connected to the pitch link and loosening the rod end jam nut, loosening the barrel jam nut, and then screwing the barrel up or down. One barrel revolution is equivalent to one-half turn of rod end. Partial turns of the barrel can be made by counting the number of hex flats rotated (see Figure 10-11) or by noting degrees of barrel rotation.

> CAUTION
>
> Check witness holes in pitch links after making an adjustment; a piece of 0.020-inch diameter safety wire must not pass through.

MAIN ROTOR TRACK AND BALANCE CHART

SHIP S/N

Page ____ of Page _____

MOUNT ACCELEROMETER ON LEFT SIDE OF CONSOLE POINTED DOWN

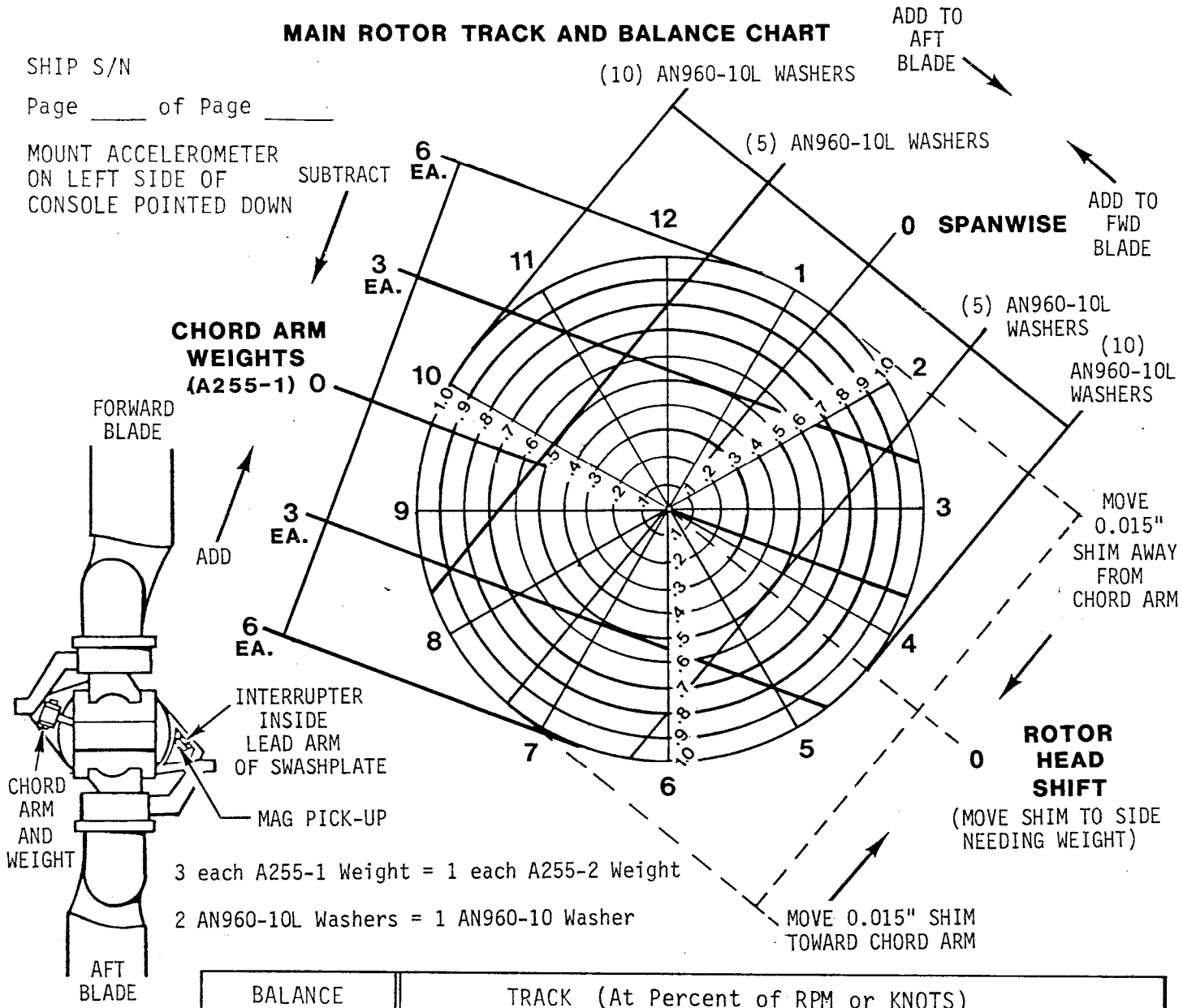

BALANCE		TRACK (At Percent of RPM or KNOTS)							
CLOCK	IPS	HOVER	CLIMB	50	70	80	90	100	104

CHANGE MADE:

CHANGE MADE:

CHANGE MADE:

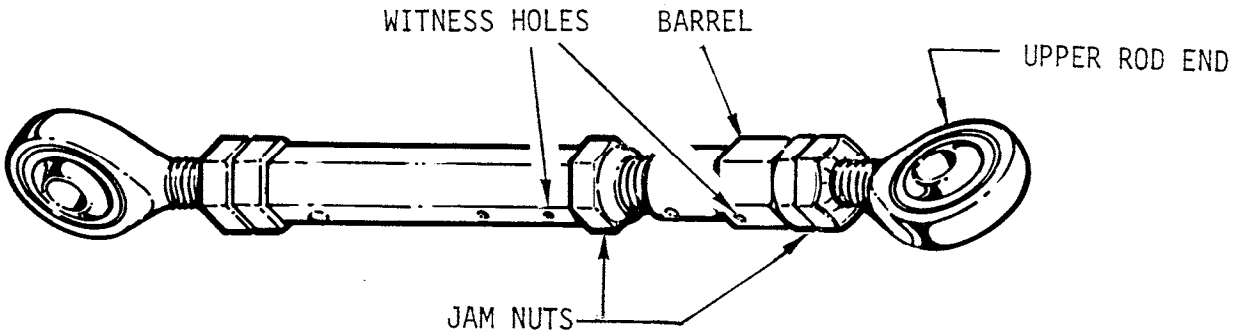

FIGURE 10-11 MAIN ROTOR PITCH LINK

10.233 Main Rotor Blade Trim Tab Adjustment

Main Rotor Blade Trim Tab Adjustments are made using the Robinson MT090 Main Rotor Tab Bender and the MT352 Trim Tab Measuring Tool. Mark the trim tab by first drawing a line across the trim tab at the trailing edge of the main rotor blade, using a soft lead pencil or felt marker. On this line mark three measuring points equal distance apart. Place the MT352 Trim Tab Measuring tool across the upper surface of the main rotor blade and trailing edge of the trim tab. The point of the dial indicator on the MT352 should rest on one of the marked measuring points. Record this measurement. Repeat for the remaining two measuring points.

To bend the trim tab, loosen the three bolts on the MT090 Tab Bender and place the tab bender over the trim tab. The trailing edge of the trim tab must be against the three bolts in the tab bender. Refer to Figure 10-12. Make very slight bends downward on the trim tab. Do not bend the trim tab upward unless absolutely necessary. Bending the trim tab upward can increase cyclic stick shake. A trim tab bend of approximately .015 inches will move the tip of the main rotor blade approximately .75 inches. Tighten the three bolts as required to make the trim tab bend. Remeasure the trim tab with the MT352 Measuring Tool (See Figure 10-13). Adjust the bend in the trim tab as required to keep the three measuring points within ± .005 inches.

CAUTION

Do not use main rotor blade trim tab bending tools manufactured by other helicopter manufacturers. The use of these tools will damage the main rotor blade.

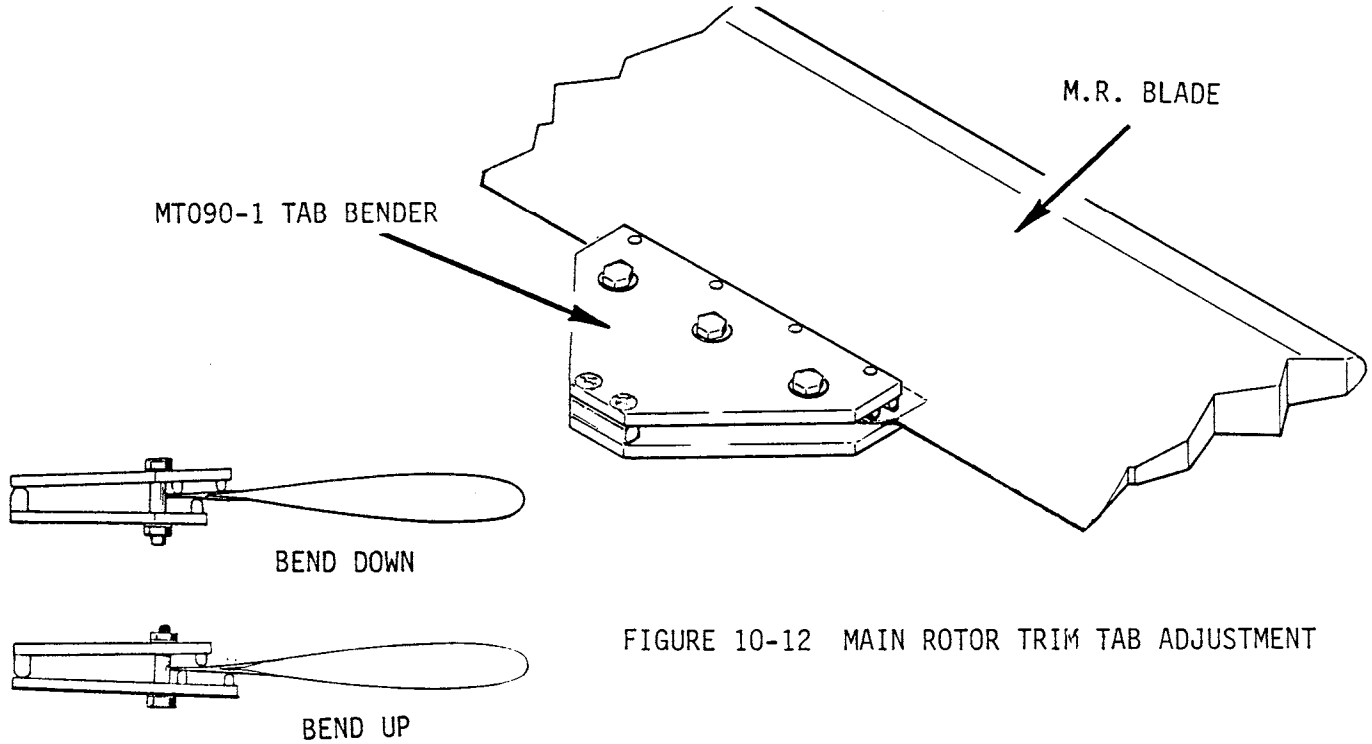

FIGURE 10-12 MAIN ROTOR TRIM TAB ADJUSTMENT

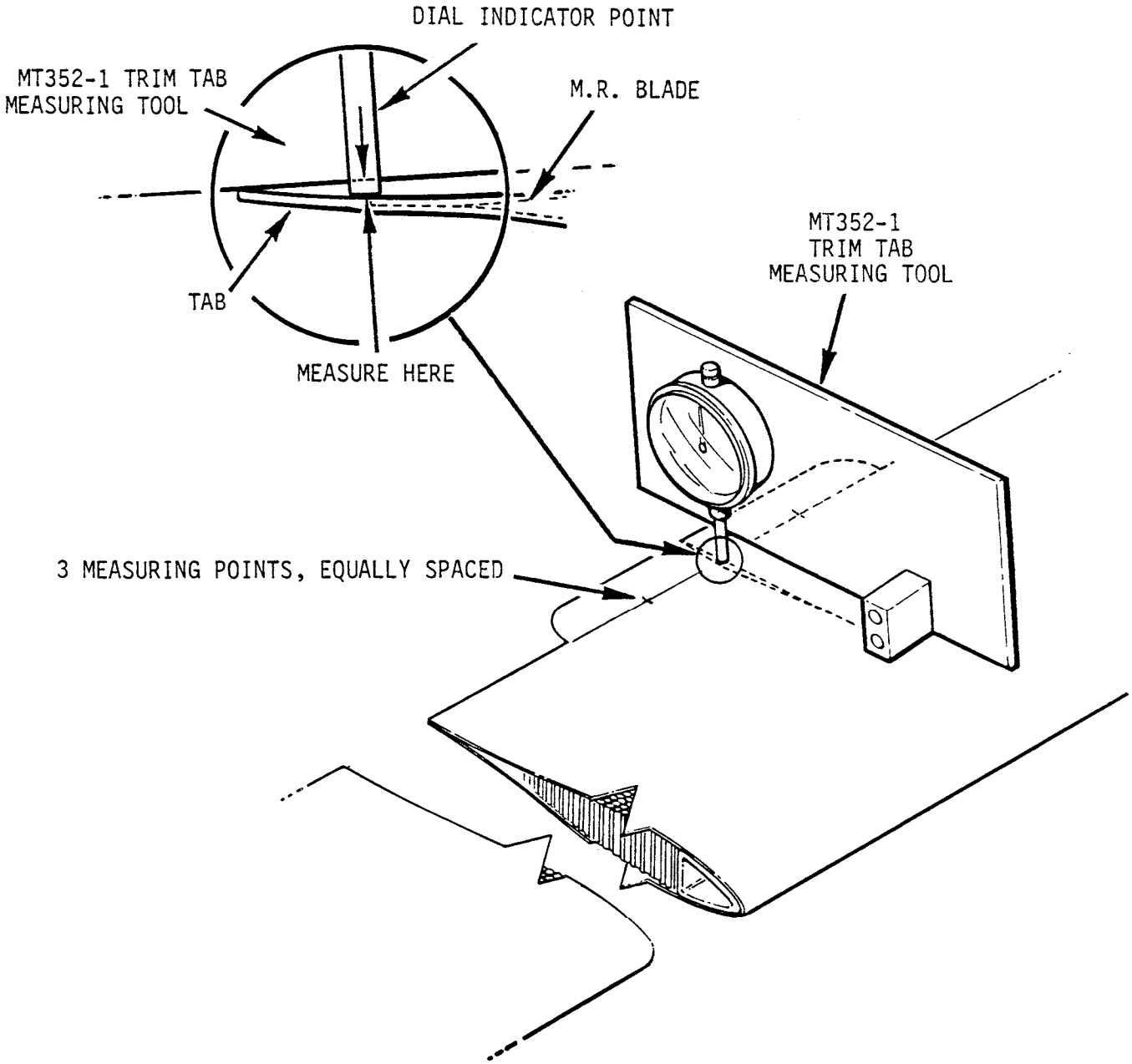

FIGURE 10-13 MAIN ROTOR TAB MEASUREMENT

10.234 Main Rotor Track and Balance Troubleshooting

The following are some of the symptoms and corrections which occur in the Track and Balance operations of the helicopter. Decide on the various causes of a given trouble and then eliminate causes one by one, beginning with the most probable.

Symptom	Probable Cause	Correction
1. Excessive Cyclic Stick Shake	Main Rotor Out of Track or Balance	Track and Balance with Chadwick-Helmuth Balancing Equipment
	Rough or Binding A205-3 Fork Assy (Upper Swashplate)	Replace or refer to Section 8.6 of Maintenance Manual
	Brinelled Spindle Bearings (rough movement)	RHC replacement of Spindle Bearings
	Blade surface rough (chipped) paint	Feather in rough edges or repaint
	Rough or Binding Pitch Links	Replace pitch link rod ends for smooth operation
	M.R. Blade Boot Misaligned	Replace boot or realign. Boot should show deformation as cyclic and collective are moved through their normal arc or travel.
	M.R. Hub Teeter or Coning Hinge Binding	RHC replacement or rework for smooth operation
	M.R. Blade Trim Tabs Bent Upward	Bend Trim Tabs down evenly
	Blade Match	RHC replacement of blade(s)
2. Excessive Ship Vibration	Main Rotor out of Track and Balance	Track and Balance with Chadwick-Helmuth Balancing Equipment
	M.R. Hub Teeter or Coning Hinge Friction Improperly Adjusted	Refer to Section 9.123 of Maintenance Manual
	Sticky Coning Hinge Bearings in M.R. Hub	RHC replacement or refer to Section 9.123

10.234 Main Rotor Track and Balance Troubleshooting (cont'd)

Symptom	Probable Cause	Correction
2. Excessive Ship Vibration (cont'd)	Brinelled Spindle Bearings (rough movement)	RHC replacement of Spindle Bearing
	Worn Teeter Bearing in M.R. Hub	RHC replacement of M.R. Hub Bearings
3. Excessive Cyclic Stick Forces	Brinelled Spindle Bearings (rough movement)	RHC replacement of Spindle Bearings
	M.R. Blade Trim Tabs Bent Upward	Bend Trim Tabs down evenly
4. Intermittent Blade Track Picture	M.R. Hub Teeter or Coning Hinge Friction Improperly Adjusted	Refer to Section 9.123
	Sticky Coning Hinge Bearings in M.R. Hub	RHC replacement or refer to Section 9.123
	Teeter Hinge not Broken-In	Adjust track to minimize error
	Brinelled Spindle Bearings (rough movement)	RHC replacement of Spindle Bearings
5. Radical Changes to Cylic Trim	Worn Teeter Hinge Bearings in M.R. Hub	RHC replacement of M.R. Hub Bearings
	Brinelled Spindle Bearings (rough movement)	RHC replacement of Spindle Bearings
6. Lateral Intermittent Aircraft Vibration	Engine misfiring due to malfunction in spark-plugs, ignition leads, magneto or engine not broken-in	Refer to Lycoming Maintenance Instructions

10.240 Tail Rotor Balance Procedure

Refer to specific manufacturer's installation instructions when using balancing equipment other than Chadwick-Helmuth 177- or 8350- series Vibrex system.

Install Chadwick-Helmuth equipment per Section 10.222. Set Function Knob on Balancer to appropriate channel. Set balancer RPM Range knob to X10 and set RPM to 340. With helicopter running, with governor ON, view tail rotor assembly with Strobex. Tune Balancer while viewing target tape and adjusting RPM dial on Balancer. Record clock angle and IPS on tail rotor balance chart. Adjust as required until balance is less than 0.2 IPS.

WARNING

Both tail rotor blades must be same part number

Spanwise balance adjustments for A029-1 square-tip blades made by adding, subtracting, or exchanging weights under the removable tip cover. Use A134-1 or -2 tip weights or AN960-8 or -8L washers. -8L washers may be trimmed as a very fine adjustment.

Spanwise balance for A029-2 round-tip blades are made by exchanging different diameter washers under nut securing blade's outboard retaining bolt. The bolt has sufficient length to allow necessary spanwise weight changes; verify 2-4 threads protruding past nut after torquing per Section 1.320.

Chordwise balance is adjusted by adding, subtracting, or exchanging A141-14, A214-3, AN960-416 or -416L washers under nut securing blade's pitch link attaching bolt. Change pitch link, attaching bolt length as required for proper thread engagement (see Section 1.300, refer to IPC for allowable lengths).

A008-2 TAIL ROTOR (WITH A029-1 SQUARE-TIP BLADES) TRACK AND BALANCE CHART

SHIP S/N _____
DATE _____
HOURMETER _____

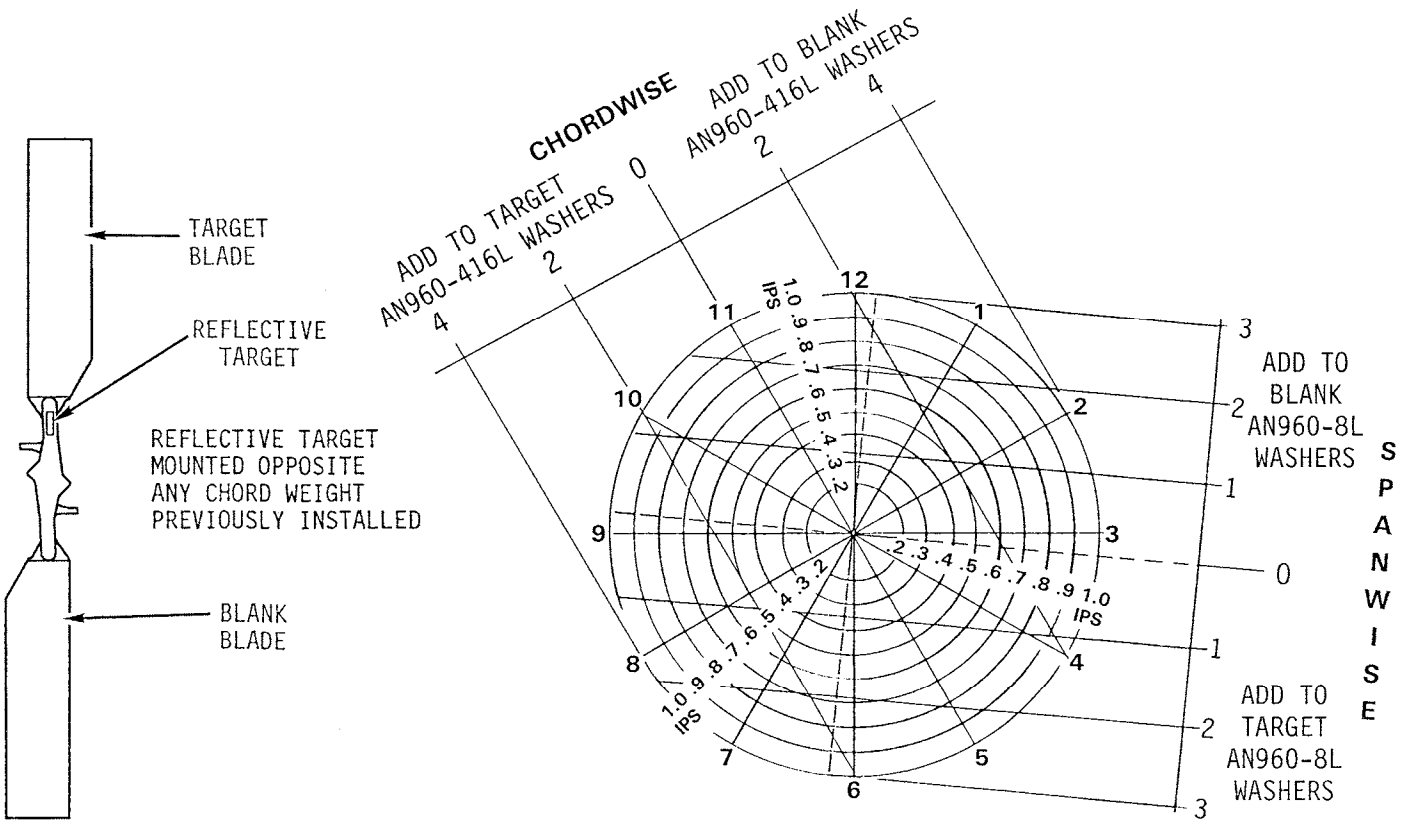

CHORDWISE WEIGHTS

(2)AN960-416L WASHERS = (1)AN960-416 WASHER
(3.5)AN960-416L WASHERS = (1)A214-3 WASHER
(5)AN960-416L WASHERS = (1)A141-14 WASHER

SPANWISE WEIGHTS

(2)AN960-8L WASHERS = (1)AN960-8 WASHER
(8)AN960-8L WASHERS = (1)A134-1 WEIGHT

RUN	CLOCK	IPS	CHANGE MADE BEFORE NEXT RUN

FIGURE 10-14

A008-4 TAIL ROTOR (WITH A029-2 ROUND-TIP BLADES) TRACK AND BALANCE CHART

SHIP S/N _____
DATE _____
HOURMETER _____

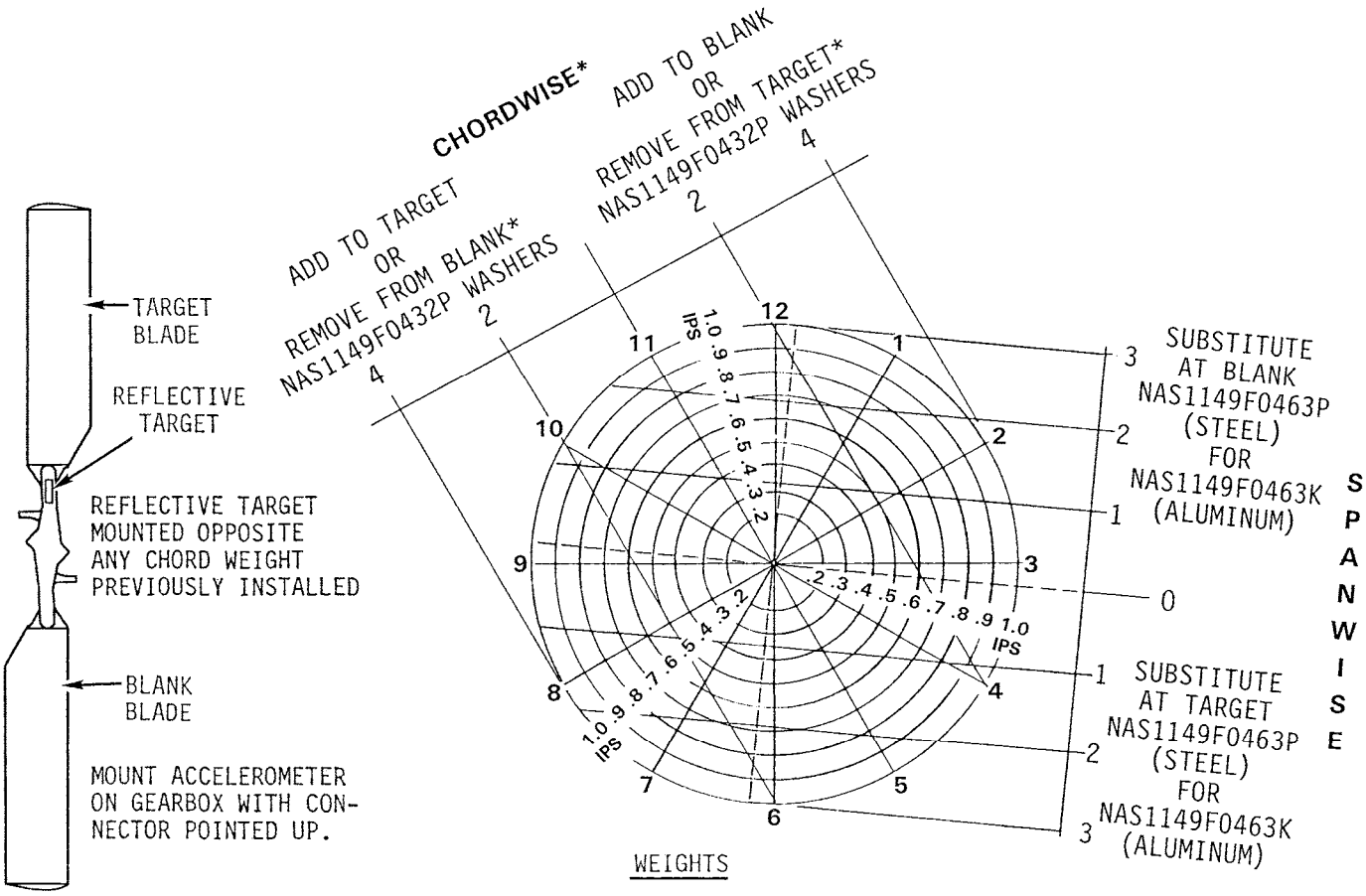

WEIGHTS

(2)NAS1149F0432P WASHERS = (1)NAS1149F0463P WASHER

(3.5)NAS1149F0432P WASHERS = (1)A214-3 WASHER

(3)NAS1149F0463P WASHERS = (1)A141-14 WASHER

(6.5)NAS1149F0463P WASHERS = (1)AN970-4 WASHER

*A MINIMUM OF ONE NAS1149F0432P WASHER MUST BE INSTALLED IN CHORDWISE LOCATION ON EACH BLADE.

RUN	CLOCK	IPS	CHANGE MADE BEFORE NEXT RUN

FIGURE 10-14A

10.250 Autorotational RPM Adjustment

Use the following procedure for checking and adjusting autorotational RPM:

WARNING

Failure to properly adjust autorotational RPM (RPM too low) may prevent the rotorcraft from achieving proper RPM at low gross weights.

1. Perform autorotation RPM check at minimum practical weight. Calculate the takeoff gross weight of the helicopter. Record the time on the hour meter.

   Take-Off gross weight _____

   Take-Off hourmeter reading _____

2. Set the altimeter to 29.92" Hg (1013.2 millibars) prior to performing the autorotation. Autorotate with the collective control firmly held against the down stop with an airspeed of 50 KIAS.

WARNING

Do not allow the rotor to overspeed when performing autorotation checks. Progressively lengthen both main rotor pitch link rod ends until full down collective can be obtained without over-speeding the rotor.

Take at least 3 RPM readings at 500 to 1000 foot altitude intervals.

Record the following in-flight data:

Test #	Hourmeter Reading	OAT	Pressure Altitude	Test % RPM
1				
2				
3				
4				
5				

10.250 Autorotational RPM Adjustment (cont'd)

3. After each flight, refer to figure 10-15 and determine the following:

Test #	Elapsed Time (in-flight hourmeter reading minus take-off hourmeter reading)	Pounds of Fuel Consumed (elapsed time x 45 lbs/hr)	Test Gross Weight (take-off gross weight minus fuel consumed	Chart % RPM	Test % RPM (from in-flight data)	RPM Correction (chart % RPM minus Test % RPM)
1						
2						
3						
4						
5						

4. Adjust the pitch links based on the average RPM correction required. Lengthen both pitch links to decrease RPM if the test RPM is greater than the chart RPM (lengthening the pitch links one full rod end turn will reduce RPM 3%). Shorten both pitch links to increase RPM. Be sure to adjust both pitch links exactly the same so track will not be affected.

5. Repeat steps (a) through (d) as required until the RPM correction is ± 1% of chart RPM. Determine chart RPM as follows:

   a. Start at outside air temperature, and draw a vertical line up to the pressure altitude.

   b. Draw a horizontal line from the pressure altitude to the rotorcraft gross weight at time of autorotation.

   c. Draw a vertical line down from the gross weight to the required autorotation RPM.

   d. Make adjustment to the main rotor pitch links as required to obtain test autorotation RPM within ± 1% of chart RPM (see Figure 10-15).

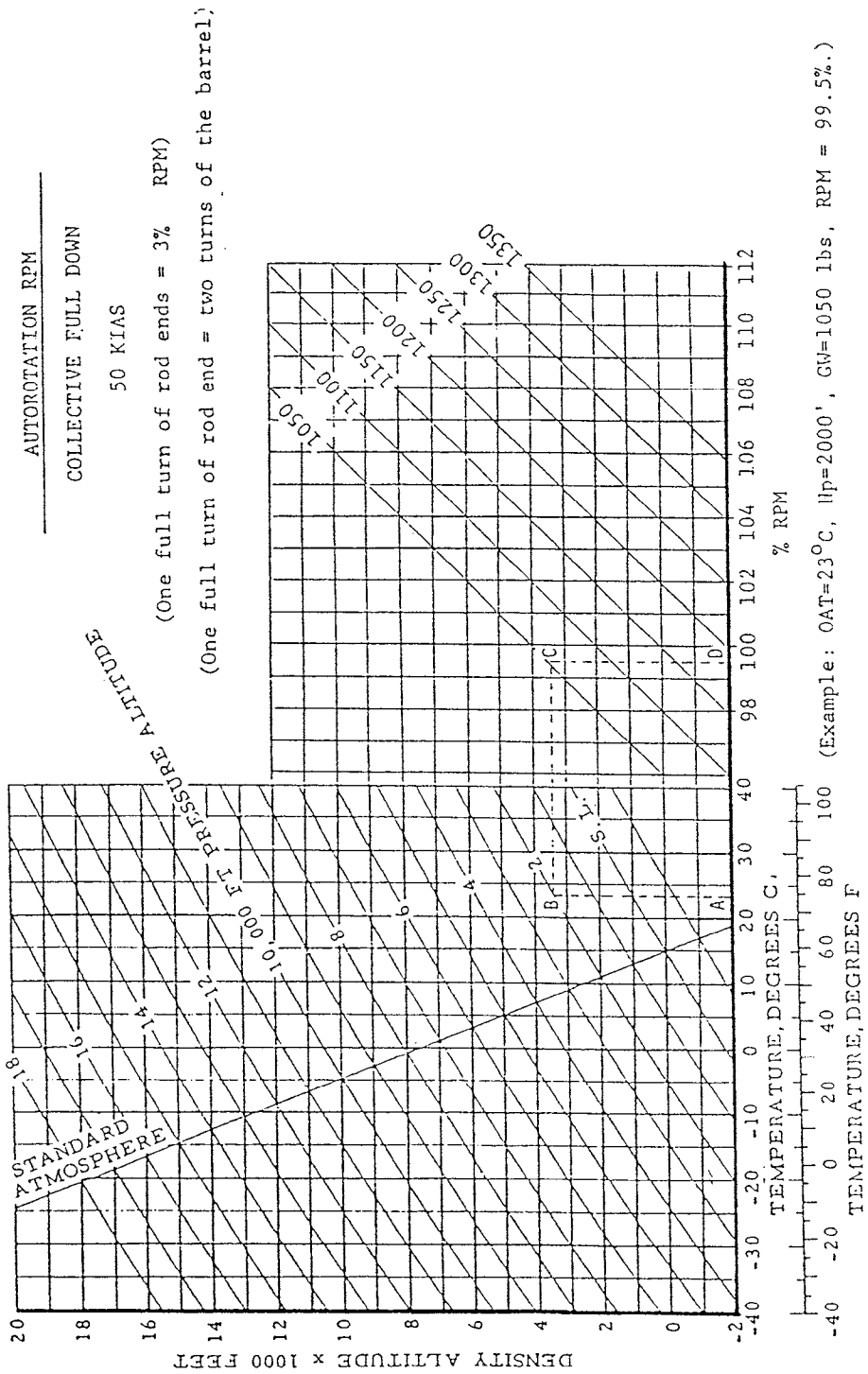
AUTOROTATION RPM
COLLECTIVE FULL DOWN
50 KIAS
(One full turn of rod ends = 3% RPM)
(One full turn of rod end = two turns of the barrel)
PRESSURE ALTITUDE
10,000 FT
STANDARD ATMOSPHERE
DENSITY ALTITUDE x 1000 FEET
TEMPERATURE, DEGREES C
TEMPERATURE, DEGREES F
% RPM
(Example: OAT=23°C, Hp=2000', GW=1050 lbs, RPM = 99.5%.)
1050
1100
1150
1200
1250
1300
1350
A
B
C
D
L.S.

FIGURE 10-15